A Few Words About Safety

Service Information

The service and repair information contained in this manual is intended for use by qualified, professional technicians. Attempting service or repairs without the proper training, tools, and equipment could cause injury to you and/or others. It could also damage this Honda product or create an unsafe condition.

This manual describes the proper methods and procedures for performing service, maintenance, and repairs. Some procedures require the use special tools. Any person who intends to use a replacement part, service procedure, or a tool that is not recommended by Honda must determine the risks to their personal safety and the safe operation of this product.

If you need to replace a part, use Honda Genuine parts with the correct part number or an equivalent part. We strongly recommend that you do not use replacement parts of inferior quality.

For Your Customer's Safety

Proper service and maintenance are essential to the customer's safety and the reliability of this product. Any error or oversight while servicing this product can result in faulty operation, damage to the product, or injury to others.

⚠WARNING

Improper service or repairs can create an unsafe condition that can cause your customer or others to be seriously hurt or killed.

Follow the procedures and precautions in this manual and other service materials carefully.

For Your Safety

Because this manual is intended for the professional service technician, we do not provide warnings about many basic shop safety practices (e.g., Hot parts-wear gloves). If you have not received shop safety training or do not feel confident about your knowledge of safe servicing practices, we recommend that you do not attempt to perform the procedures described in this manual.

Some of the most important general service safety precautions are given below. However, we cannot warn you of every conceivable hazard that can arise in performing service and repair procedures. Only you can decide whether or not you should perform a given task.

⚠WARNING

Failure to properly follow instructions and precautions can cause you to be seriously hurt or killed.

Follow the procedures and precautions in this manual carefully.

Important Safety Precautions

Make sure you have a clear understanding of all basic shop safety practices and that you are wearing appropriate clothing and using safety equipment. When performing any service task, be especially careful of the following:

- Read all of the instructions before you begin, and make sure you have the tools, the replacement or repair parts, and the skills required to perform the tasks safely and completely.
- Protect your eyes by using proper safety glasses, goggles, or face shields anytime you hammer, drill, grind, or work around pressurized air, pressurized liquids, springs or other stored-energy components. If there is any doubt, put on eye protection.
- Use other protective wear when necessary, for example gloves or safety shoes. Handling hot or sharp parts can cause severe burns or cuts. Before you grab something that looks like it can hurt you, stop and put on gloves.
- Protect yourself and others whenever you have equipment hoisted in the air. Anytime you lift this product with a hoist, make sure that the hoist hook is securely attached to the product.

Make sure the engine is off before you begin any servicing procedures, unless the instruction tells you to do otherwise. This will help eliminate several potential hazards:

- Carbon monoxide poisoning from engine exhaust. Be sure there is adequate ventilation whenever you run the engine.
- Burns from hot parts. Let the engine and exhaust system cool before working in those areas.
- Injury from moving parts. If the instruction tells you to run the engine, be sure your hands, fingers, and clothing are out of the way.

Gasoline vapors and hydrogen gasses from batteries are explosive. To reduce the possibility of a fire or explosion, be careful when working around gasoline or batteries.

- Use only a nonflammable solvent, not gasoline, to clean parts.
- Never store gasoline in an open container.
- Keep all cigarettes, sparks, and flames away from the battery and all fuel-related parts.

CONTENTS

SPECIFICATIONS	1
SERVICE INFORMATION	2
MAINTENANCE	3
TROUBLESHOOTING	4
FAN COVER	5
FUEL SYSTEM	6
GOVERNOR SYSTEM	7
IGNITION SYSTEM	8
STARTING SYSTEM	9
OTHER ELECTRICAL	10
MUFFLER	11
CYLINDER HEAD	12
CRANKCASE	13
WIRING DIAGRAMS	14
INDEX	

INTRODUCTION

This manual covers the service and repair procedures for the Honda GP160H/GP200H.

All information contained in this manual is based on the latest product information available at the time of printing. We reserve the right to make changes at anytime without notice.

No part of this publication may be reproduced, stored in a retrieval system, or transmitted, in any form, by any means, electronic, mechanical, photocopying, recording, or otherwise, without prior written permission of the publisher. This includes text, figures, and tables.

As you read this manual, you will find information that is preceded by a NOTICE symbol. The purpose of this message is to help prevent damage to this Honda product, other property, or the environment.

SAFETY MESSAGES

Your safety and the safety of others are very important. To help you make informed decisions, we have provided safety messages and other safety information throughout this manual. Of course, it is not practical or possible to warn you about all the hazards associated with servicing these products. You must use your own good judgement.

You will find important safety information in a variety of forms, including:

- Safety Labels – on the product.
- Safety Messages – preceded by a safety alert symbol ⚠ and one of three signal words, DANGER, WARNING, or CAUTION. These signal words mean:

⚠DANGER You WILL be KILLED or SERIOUSLY HURT if you don't follow instructions.

⚠WARNING You CAN be KILLED or SERIOUSLY HURT if you don't follow instructions.

⚠CAUTION You CAN be HURT if you don't follow instructions.

- Instructions – how to service these products correctly and safely.

ALL INFORMATION, ILLUSTRATIONS, DIRECTIONS, AND SPECIFICATIONS INCLUDED IN THIS PUBLICATION ARE BASED ON THE LATEST PRODUCT INFORMATION AVAILABLE AT THE TIME OF APPROVAL FOR PRINTING. Honda Motor Co., Ltd. RESERVES THE RIGHT TO MAKE CHANGES AT ANY TIME WITHOUT NOTICE AND WITHOUT INCURRING ANY OBLIGATION WHATSOEVER. NO PART OF THIS PUBLICATION MAY BE REPRODUCED WITHOUT WRITTEN PERMISSION. THIS MANUAL IS WRITTEN FOR PERSONS WHO HAVE ACQUIRED BASIC KNOWLEDGE OF MAINTENANCE ON Honda PRODUCTS.

© Honda Motor Co., Ltd.
SERVICE PUBLICATION OFFICE

Date of Issue: July 2014

SERVICE RULES

- Use Honda Genuine or Honda-recommended parts and lubricants or their equivalents. Parts that do not meet Honda's design specifications may damage the unit.
- Use the special tools designed for the product.
- Install new gaskets, O-rings, etc. when reassembling.
- When torquing bolts or nuts, begin with larger-diameter or inner bolts first and tighten to the specified torque diagonally, unless a particular sequence is specified.
- Clean parts in cleaning solvent upon disassembly. Lubricate any sliding surfaces before reassembly.
- After reassembly, check all parts for proper installation and operation.
- Many screws used in this machine are self-tapping. Be aware that cross-threading or overtightening these screws will strip the threads and ruin the hole.

Use only metric tools when servicing this unit. Metric bolts, nuts and screws are not interchangeable with non-metric fasteners. The use of incorrect tools and fasteners will damage the unit.

SYMBOLS

The symbols used throughout this manual show specific service procedures. If supplementary information is required pertaining to these symbols, it will be explained specifically in the text without the use of the symbols.

NEW	Replace the part(s) with new one(s) before assembly.
OIL	Use the recommend engine oil, unless otherwise specified.
Mo OIL	Use molybdenum oil solution (mixture of the engine oil and molybdenum grease in a ratio of 1:1).
GREASE	Use multi-purpose grease (lithium based multi-purpose grease NLGI #2 or equivalent).
WR GREASE	Use marine grease (water resistant urea based grease).
LOCK	Apply a locking agent. Use a medium strength locking agent unless otherwise specified.
SEAL	Apply sealant.
ATF	Use automatic transmission fluid.
(○ x ○) (○)	Indicates the diameter, length, and quantity of metric bolts used.
page 1-1	Indicates the reference page.

ABBREVIATIONS

Throughout this manual, the following abbreviations are used to identify the respective parts or systems.

Abbreviated term	Full term
ACG	Alternator
API	American Petroleum Institute
Approx.	Approximately
Assy.	Assembly
ATDC	After Top Dead Center
ATF	Automatic Transmission Fluid
ATT	Attachment
BAT	Battery
BDC	Bottom Dead Center
BTDC	Before Top Dead Center
BARO	Barometric Pressure
CKP	Crankshaft Position
Comp.	Complete
CMP	Camshaft Position
CYL	Cylinder
DLC	Data Link Connector
EBT	Engine Block Temperature
ECT	Engine Coolant Temperature
ECM	Engine Control Module
EMT	Exhaust Manifold Temperature
EOP	Engine Oil Pressure
EX	Exhaust
F	Front or Forward
GND	Ground
HO2S	Heated Oxygen sensor
IAB	Intake Air Bypass
IAC	Idle Air Control
IAT	Intake Air Temperature
I.D.	Inside diameter
IG or IGN	Ignition
IN	Intake
INJ	Injection
L.	Left
MAP	Manifold Absolute Pressure
MIL	Malfunction Indicator Lamp
O.D.	Outside Diameter
OP	Optional Part
PGM-FI	Programmed-Fuel Injection
P/N	Part Number
Qty	Quantity
R.	Right
SAE	Society of Automotive Engineers
SCS	Service Check Signal
STD	Standard
SW	Switch
TDC	Top Dead Center
TP	Throttle Position
VTEC	Variable Valve Timing & Valve Lift Electronic Control

Bl	Black	G	Green	Br	Brown	Lg	Light green
Y	Yellow	R	Red	O	Orange	P	Pink
Bu	Blue	W	White	Lb	Light blue	Gr	Gray

1. SPECIFICATIONS

SERIAL NUMBER LOCATION ····· 1-2

P.T.O. TYPE VARIATION ····· 1-2

DIMENSIONS AND WEIGHTS SPECIFICATIONS ····· 1-3

ENGINE SPECIFICATIONS ····· 1-4

PERFORMANCE CURVES ····· 1-6

DIMENSIONAL DRAWINGS ····· 1-8

P.T.O. DIMENSIONAL DRAWINGS ····· 1-10

SERIAL NUMBER LOCATION

The model [1], type [2] and engine serial number [3] are stamped on the crankcase.

Refer to them when ordering parts or making technical inquiries.

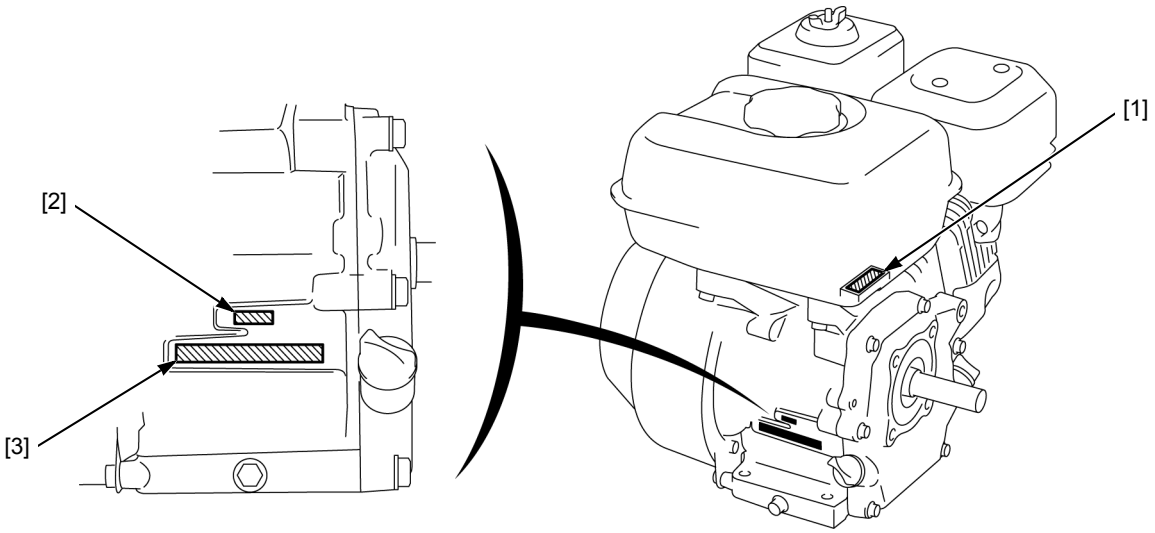

P.T.O. TYPE VARIATION

GP160H

P.T.O. type			Q				V
Type			QHB1	QHKR	QMPB	QX3	VX3
Control base	Remote	Internal	○	○	○		
		EXP				○	
	Fixed throttle operation						○
Oil alert unit						○	○

GP200H

P.T.O. type			Q				V
Type			QHB1	QHKR	QMPB	QX3	VX3
Control base	Remote	Internal	○	○	○		
		EXP				○	
	Fixed throttle operation						○
Oil alert unit						○	○

DIMENSIONS AND WEIGHTS SPECIFICATIONS

GP160H

	P.T.O. type	DIMENSIONS AND WEIGHTS
Overall length	Q*	314 mm (12.4 in)
	V*	324 mm (12.8 in)
Overall width	Q*	363 mm (14.3 in)
	V*	363 mm (14.3 in)
Overall height	Q*	335 mm (13.2 in)
	V*	335 mm (13.2 in)
Dry weight	Q*	14.9 kg (32.8 lbs)
	V*	14.9 kg (32.8 lbs)
Operating weight	Q*	17.8 kg (39.2 lbs)
	V*	17.8 kg (39.2 lbs)

*: P. T. O. type. (page 1-2)

GP200H

	P.T.O. type	DIMENSIONS AND WEIGHTS
Overall length	Q*	323 mm (12.7 in)
	V*	333 mm (13.1 in)
Overall width	Q*	378 mm (14.9 in)
	V*	378 mm (14.9 in)
Overall height	Q*	335 mm (13.2 in)
	V*	335 mm (13.2 in)
Dry weight	Q*	16.0 kg (35.0 lbs)
	V*	16.0 kg (35.0 lbs)
Operating weight	Q*	19.5 kg (43.0 lbs)
	V*	19.5 kg (43.0 lbs)

*: P. T. O. type. (page 1-2)

ENGINE SPECIFICATIONS

GP160H

Model	GP160H
Description code	GCASH
Type	4 stroke, overhead valve, single cylinder, inclined by 25°
Displacement	163 cm^3 (9.9 cu-in)
Bore x stroke	68.0 x 45.0 mm (2.68 x 1.77 in)
Net power (SAE J1349) *1	3.6 kW (4.8 HP)/3,600 min^{-1} (rpm)
Continuous rated power	2.9 kW (3.9 HP)/3,600 min^{-1} (rpm)
Maximum net torque (SAE J1349) *1	10.3 N·m (1.05 kgf·m, 7.6 lbf·ft)/2,500 min^{-1} (rpm)
Compression ratio	8.5 : 1
Fuel consumption (at continuous rated power) *1	1.4 Liters (0.37 US gal, 0.31 Imp gal)/h
Ignition system	Transistorized magneto
Ignition timing	B.T.D.C. 25° /1,400 min^{-1} (rpm)
Recommended spark plug	BPR6ES (NGK)/W20EPR-U (DENSO)
Lubrication system	Forced splash
Oil capacity	0.58 Liter (0.61 US qt, 0.51 Imp qt)
Recommended oil	SAE 10W-30 API service classification SE or higher
Cooling system	Forced air
Starting system	Recoil starter
Stopping system	Ignition primary circuit ground
Carburetor	Horizontal type, butterfly valve
Air cleaner	Dual type
Governor	Centrifugal weight system
Breather system	Flat valve type
Fuel used	Unleaded gasoline with a pump octane rating 86 or higher
Fuel tank capacity	3.1 Liters (0.82 US gal, 0.68 Imp gal)

*1: The power rating of the engine indicated in this document is the net power output tested on a production engine for the engine model and measured in accordance with SAE J1349 at 3,600 min^{-1} (rpm) (net power) and at 2,500 min^{-1} (rpm) (max net torque). Mass production engines may vary from this value. Actual power output for the engine installed in the final machine will vary depending on numerous factors, including the operating speed of the engine in application, environmental conditions, maintenance, and other variables.

GP200H

Model	GP200H
Description code	GCATH
Type	4 stroke, overhead valve, single cylinder, inclined by 25°
Displacement	196 cm^3 (12.0 cu-in)
Bore x stroke	68.0 x 54.0 mm (2.68 x 2.13 in)
Net power (SAE J1349) *1	4.1 kW (5.5 HP)/3,600 min^{-1} (rpm)
Continuous rated power	3.7 kW (5.0 HP)/3,600 min^{-1} (rpm)
Maximum net torque (SAE J1349) *1	12.4 N·m (1.26 kgf·m, 9.1 lbf·ft)/2,500 min^{-1} (rpm)
Compression ratio	8.5 : 1
Fuel consumption (at continuous rated power) *1	1.7 Liters (0.45 US gal, 0.37 Imp gal)/h
Ignition system	Transistorized magneto
Ignition timing	B.T.D.C. 20° /1,400 min^{-1} (rpm)
Recommended spark plug	BPR6ES (NGK)/W20EPR-U (DENSO)
Lubrication system	Forced splash
Oil capacity	0.60 Liter (0.63 US qt, 0.53 Imp qt)
Recommended oil	SAE 10W-30 API service classification SE or higher
Cooling system	Forced air
Starting system	Recoil starter
Stopping system	Ignition primary circuit ground
Carburetor	Horizontal type, butterfly valve
Air cleaner	Dual type
Governor	Centrifugal weight system
Breather system	Flat valve type
Fuel used	Unleaded gasoline with a pump octane rating 86 or higher
Fuel tank capacity	3.1 Liters (0.82 US gal, 0.68 Imp gal)

*1: The power rating of the engine indicated in this document is the net power output tested on a production engine for the engine model and measured in accordance with SAE J1349 at 3,600 min^{-1} (rpm) (net power) and at 2,500 min^{-1} (rpm) (max net torque). Mass production engines may vary from this value. Actual power output for the engine installed in the final machine will vary depending on numerous factors, including the operating speed of the engine in application, environmental conditions, maintenance, and other variables.

PERFORMANCE CURVES

GP160H

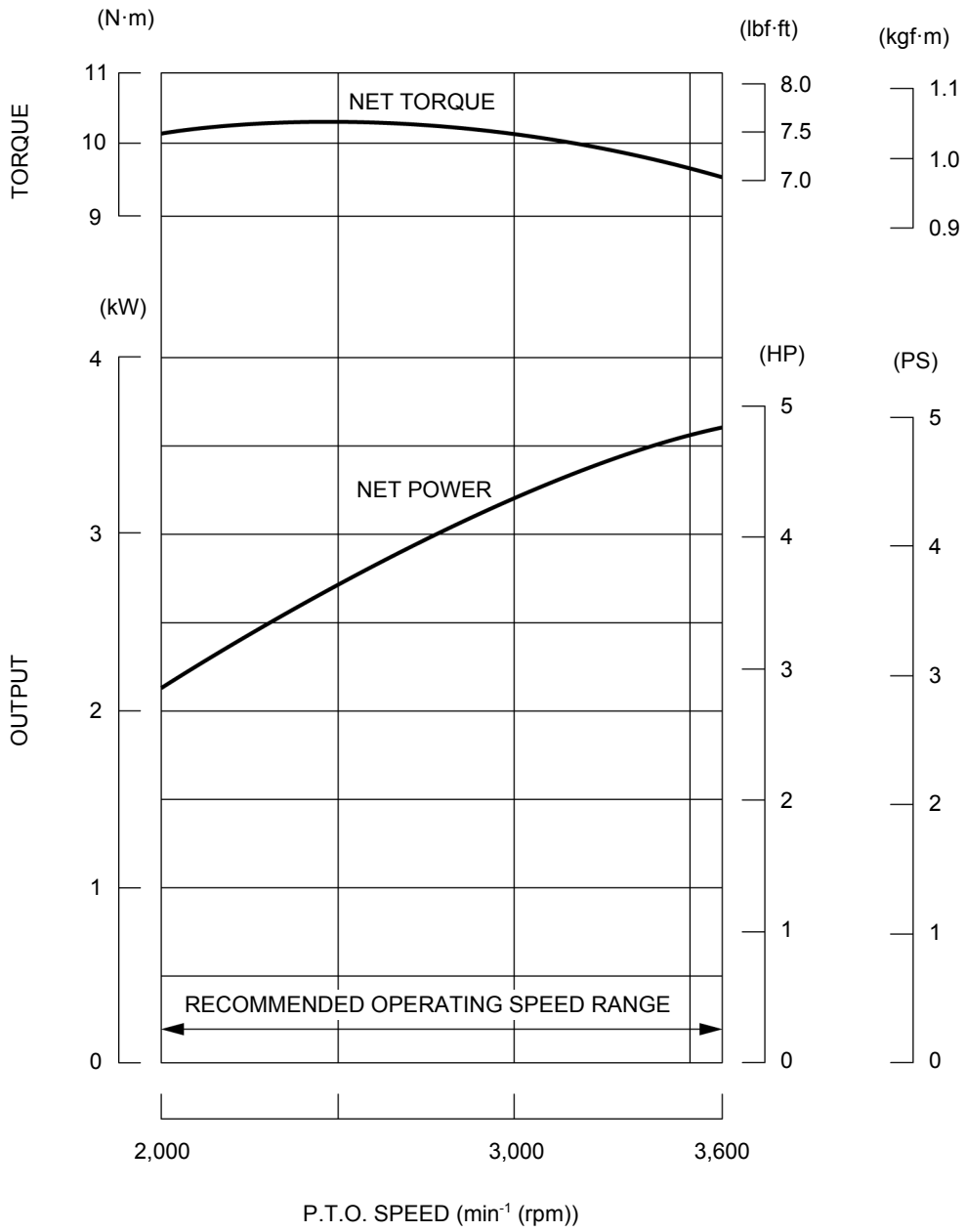

GP200H

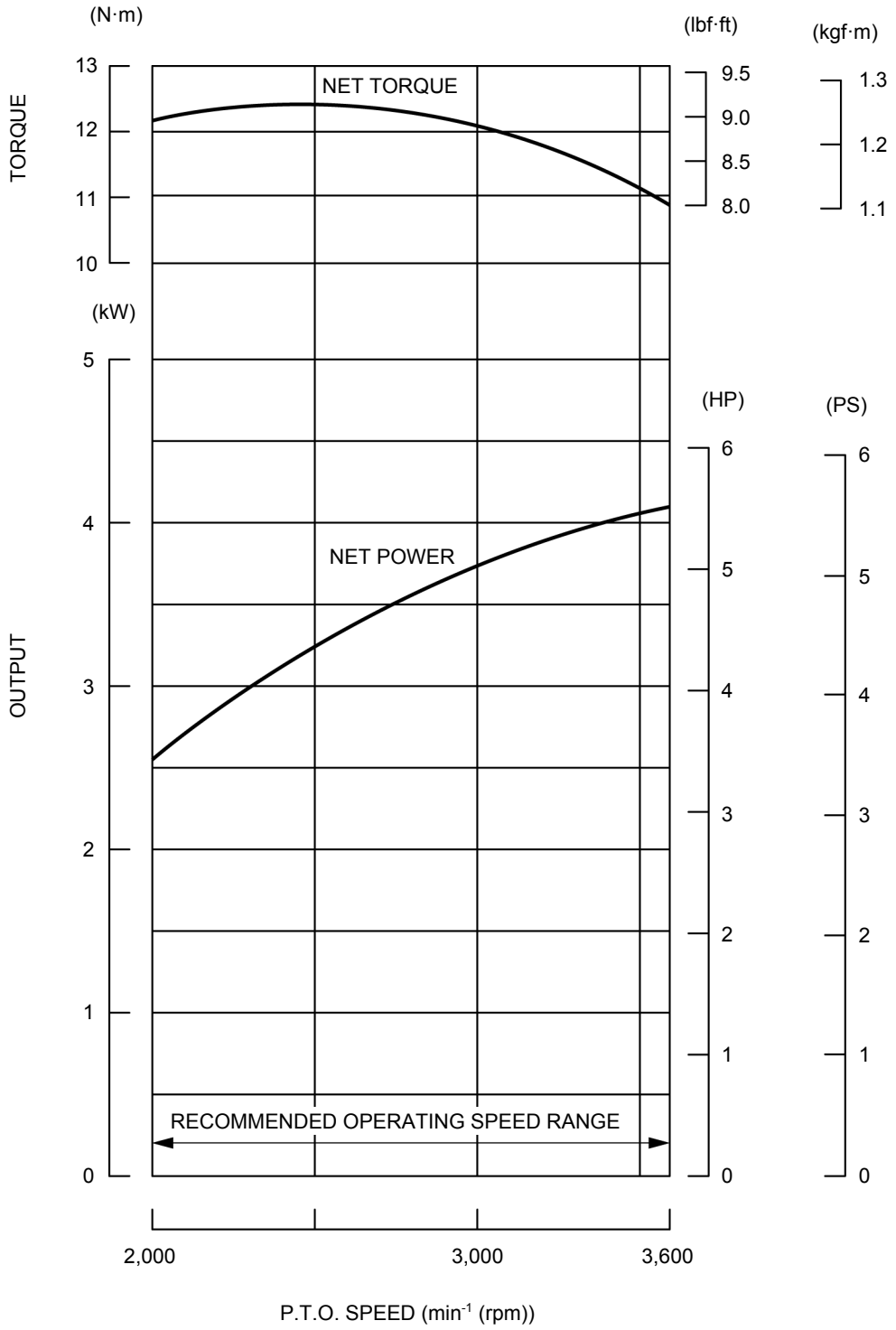
(N·m)
(lbf·ft)
(kgf·m)
TORQUE
13
12
11
10
9.5
9.0
8.5
8.0
1.3
1.2
1.1
NET TORQUE
(kW)
(HP)
(PS)
OUTPUT
5
4
3
2
1
0
6
5
4
3
2
1
0
NET POWER
RECOMMENDED OPERATING SPEED RANGE
2,000
3,000
3,600
P.T.O. SPEED (min-1 (rpm))

DIMENSIONAL DRAWINGS

*: P.T.O. type. (page 1-2)

GP160H

Unit: mm (in)

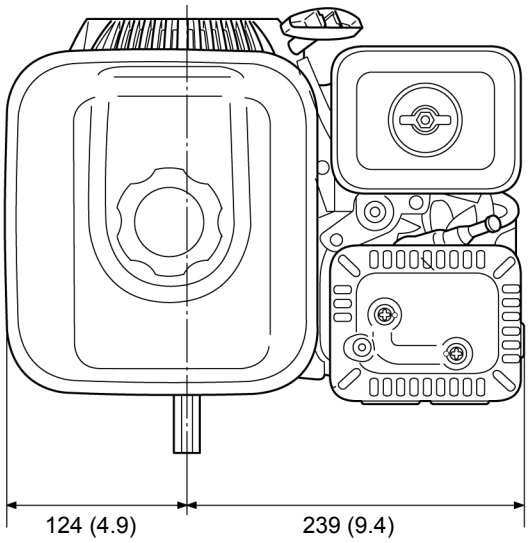

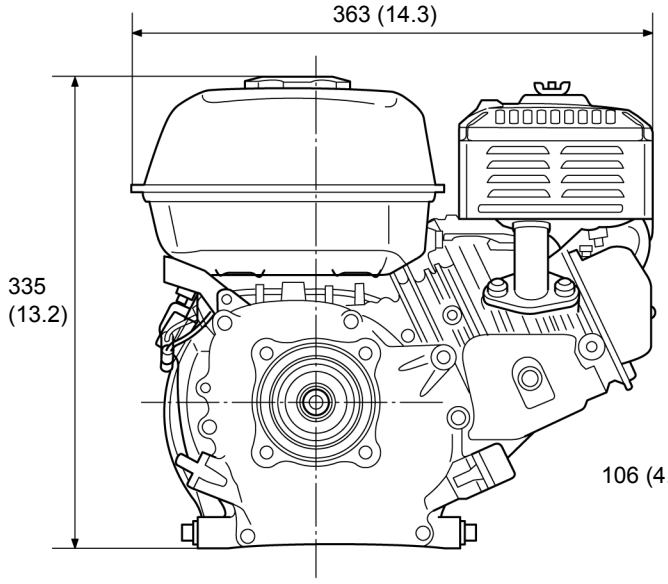

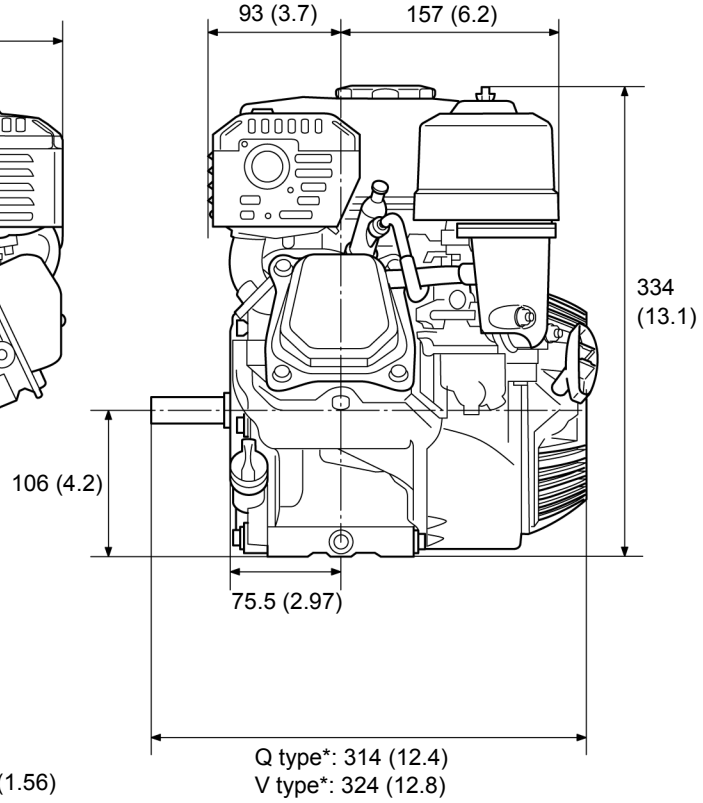

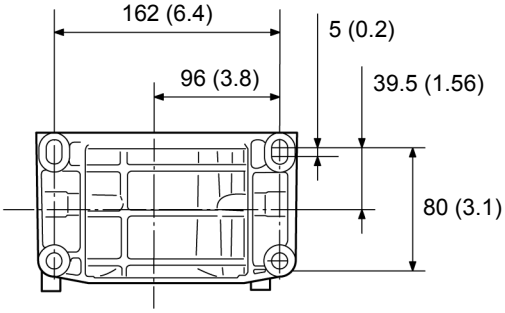

GP200H

Unit: mm (in)

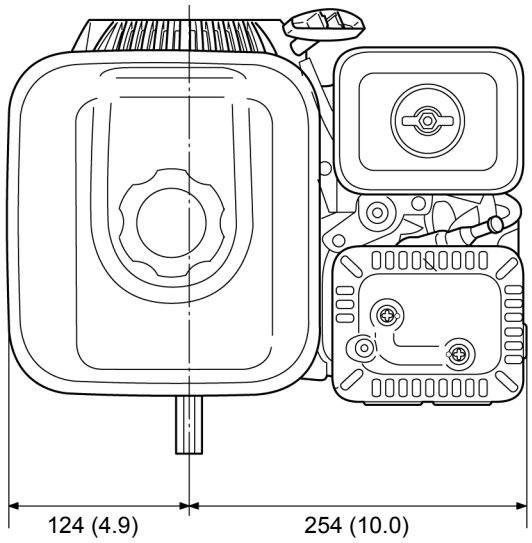

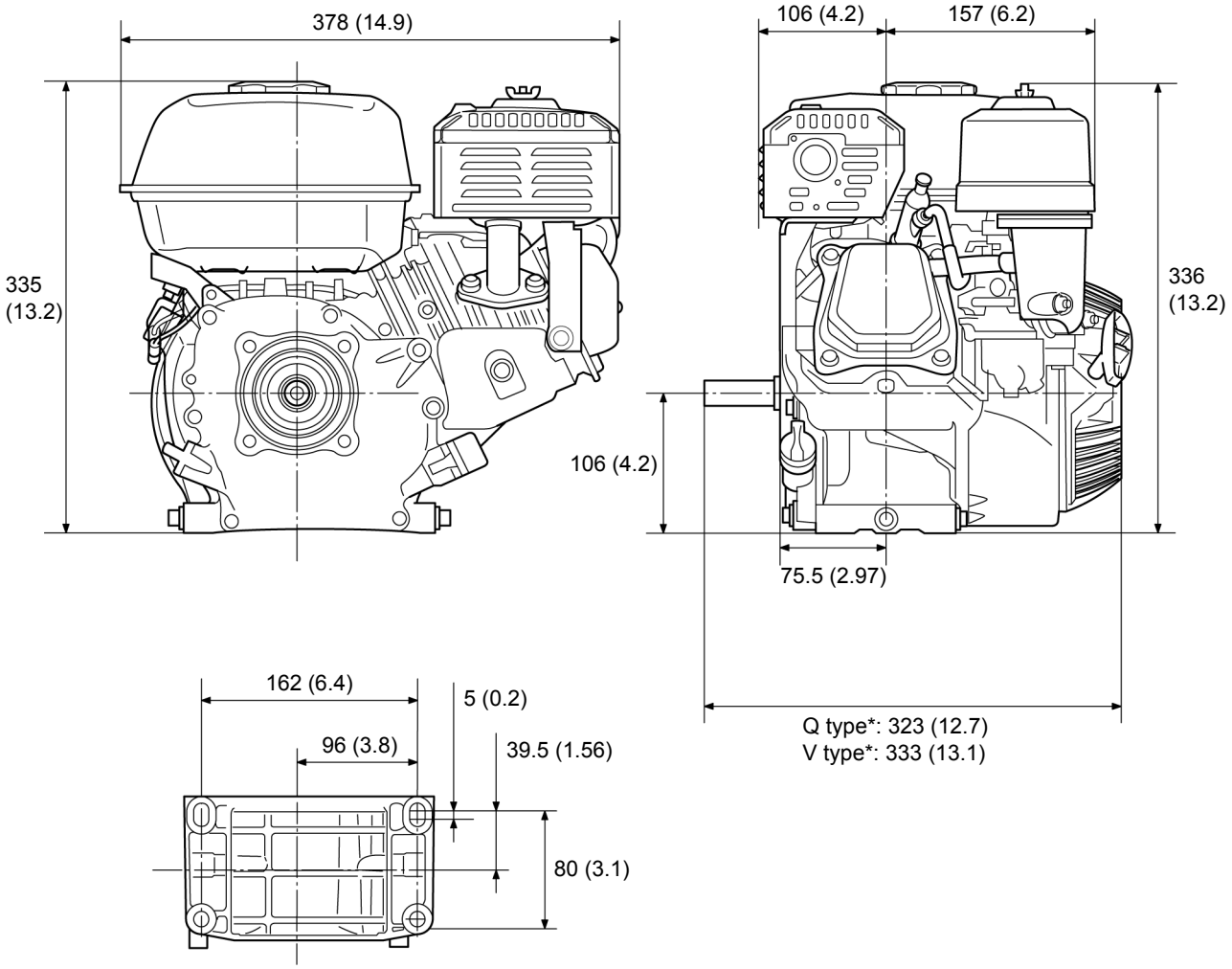

P.T.O. DIMENSIONAL DRAWINGS

*: P.T.O. type. (page 1-2)

GP160H

Unit: mm (in)

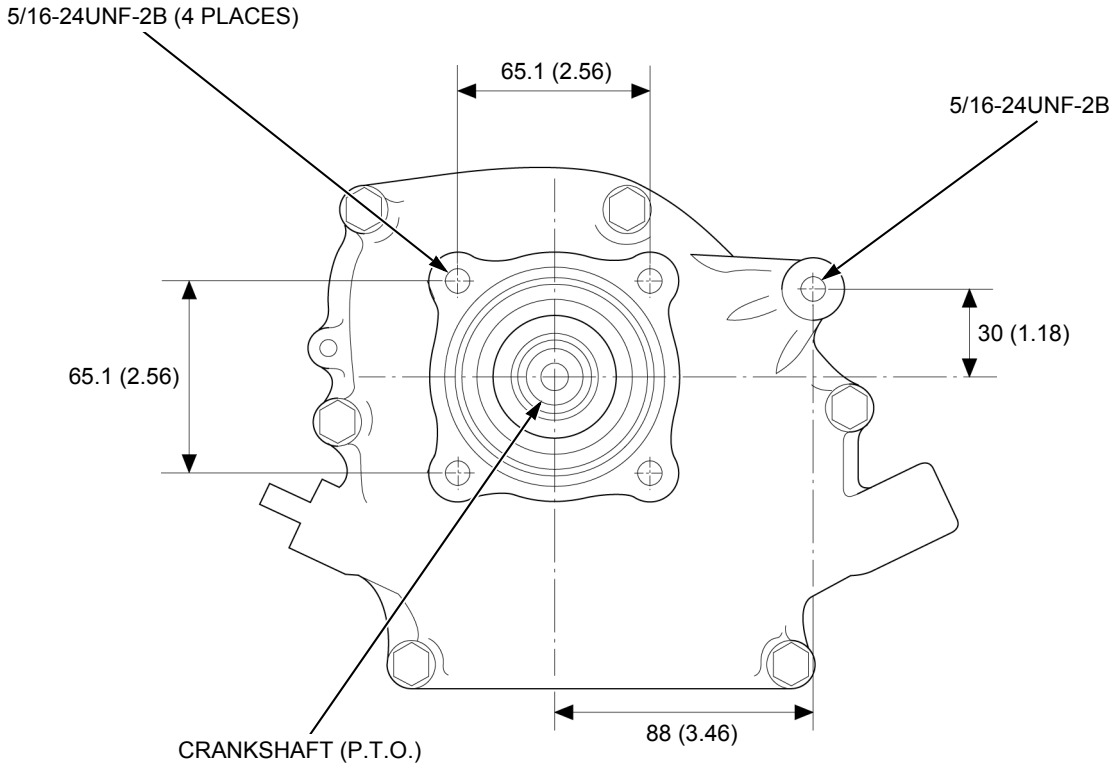

Q type*

Unit: mm (in)

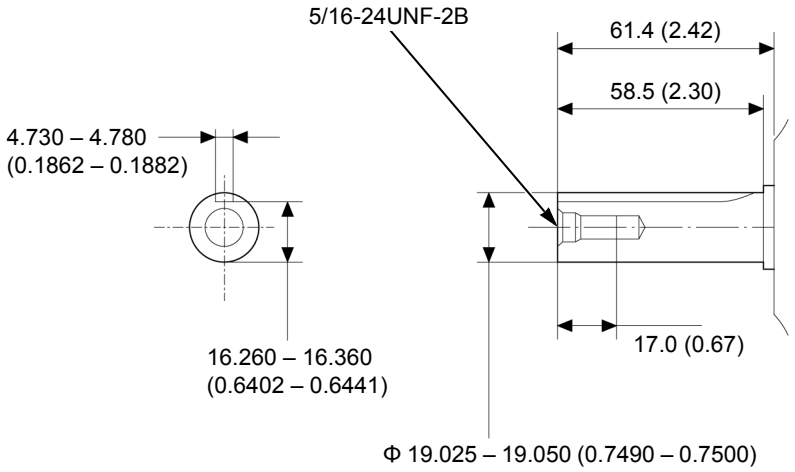

V type*

Unit: mm (in)

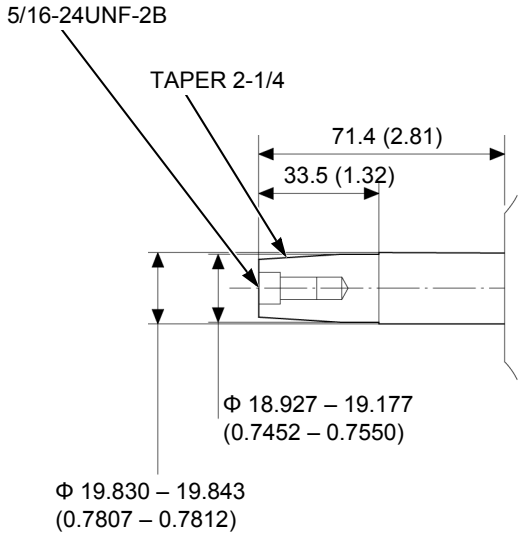

GP200H

Unit: mm (in)

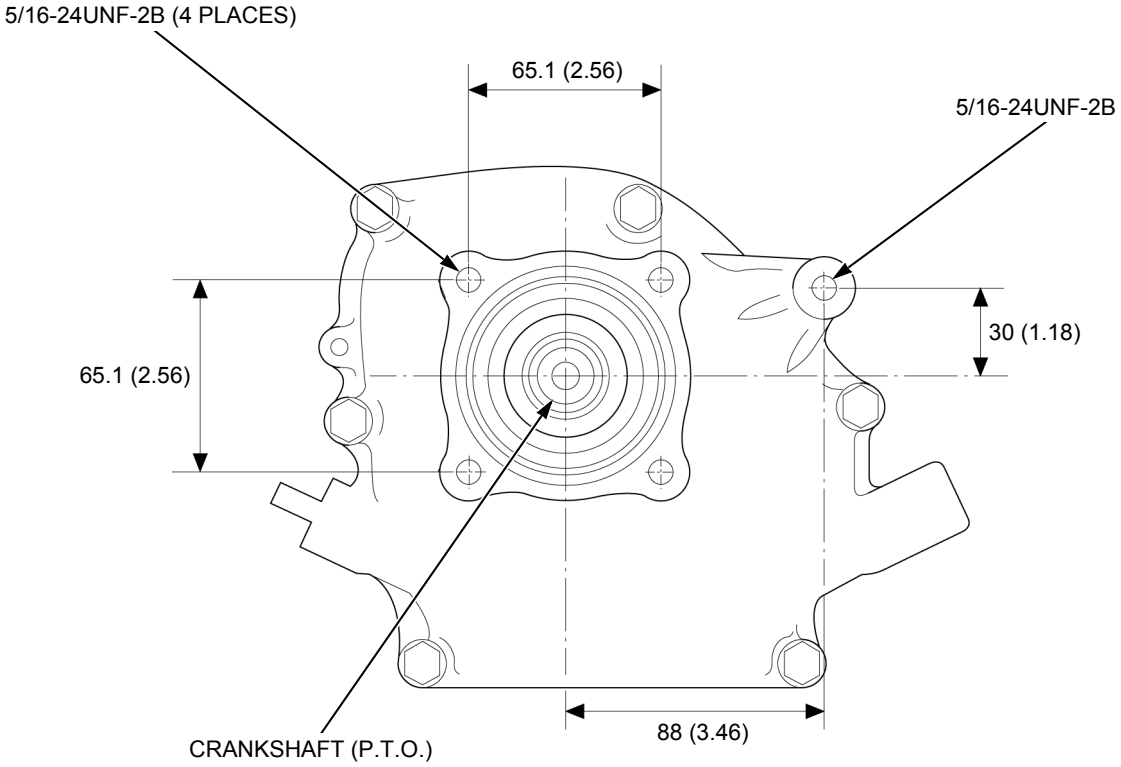

Q type*

Unit: mm (in)

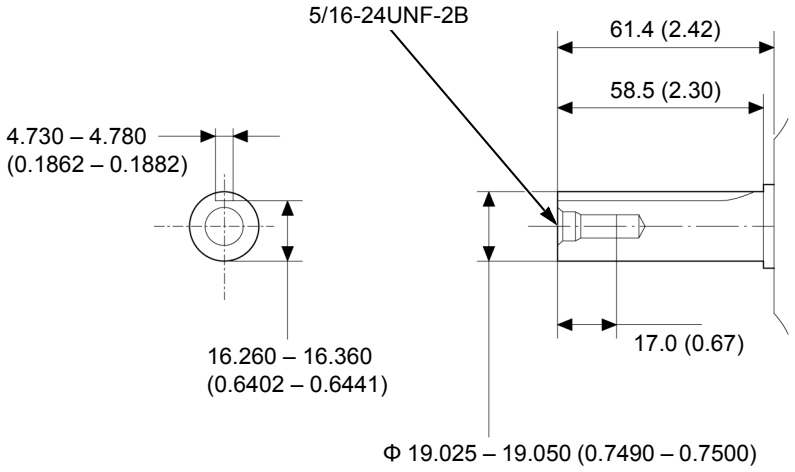

V type*

Unit: mm (in)

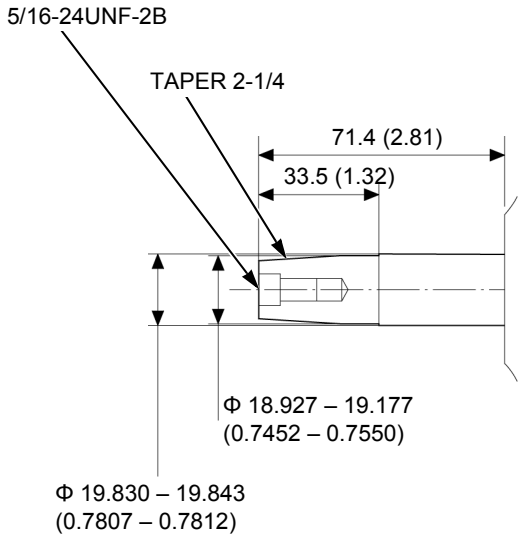

MEMO

2. SERVICE INFORMATION

MAINTENANCE STANDARDS ····· 2-2
TORQUE VALUES ····· 2-4
LUBRICATION & SEAL POINTS ····· 2-5
TOOLS ····· 2-6
HARNESS AND TUBE ROUTING ····· 2-8

MAINTENANCE STANDARDS

GP160H

Unit: mm (in)

Part	Item		Standard	Service limit
Engine	Maximum speed (at no load)		3,900 ± 100 min^{-1} (rpm)	–
	Idle speed		1,400 $^{+200}_{-150}$ min^{-1} (rpm)	–
	Cylinder compression		0.49 – 0.69 MPa (5.0 – 7.0 kgf/cm^2, 71 – 100 psi)/600 min^{-1} (rpm)	–
Cylinder head	Warpage		–	0.10 (0.004)
Cylinder	Sleeve I.D.		68.000 – 68.020 (2.6772 – 2.6779)	68.165 (2.6837)
Piston	Skirt O.D.		67.965 – 67.985 (2.6758 – 2.6766)	67.845 (2.6711)
	Piston-to-cylinder clearance		0.015 – 0.055 (0.0006 – 0.0022)	0.12 (0.005)
	Piston pin bore I.D.		18.002 – 18.008 (0.7087 – 0.7090)	18.048 (0.7105)
Piston pin	Pin O.D.		17.992 – 17.998 (0.7083 – 0.7086)	17.954 (0.7068)
	Piston pin-to-piston pin bore clearance		0.004 – 0.016 (0.0002 – 0.0006)	0.06 (0.002)
Piston rings	Ring side clearance	Top	0.035 – 0.070 (0.0014 – 0.0028)	0.15 (0.006)
		Second	0.045 – 0.080 (0.0018 – 0.0032)	0.15 (0.006)
	Ring end gap	Top	0.200 – 0.350 (0.0079 – 0.0138)	1.0 (0.04)
		Second	0.350 – 0.500 (0.0138 – 0.0197)	1.0 (0.04)
		Oil (side rail)	0.20 – 0.70 (0.008– 0.028)	1.0 (0.04)
	Ring width	Top	0.950 – 0.970 (0.0374 – 0.0382)	0.93 (0.037)
		Second	0.940 – 0.960 (0.0370 – 0.0378)	0.92 (0.036)
Connecting rod	Small end I.D.		18.006 – 18.017 (0.7089 – 0.7093)	18.07 (0.711)
	Big end side clearance		0.30 – 0.70 (0.012 – 0.018)	1.1 (0.04)
	Big end I.D.		30.015 – 30.025 (1.1817 – 1.1821)	30.066 (1.1837)
	Big end oil clearance		0.035 – 0.055 (0.0014 – 0.0022)	0.12 (0.005)
Crankshaft	Crankpin O.D.		29.970 – 29.980 (1.1799 – 1.1803)	29.92 (1.178)
	Crankshaft runout		–	0.10 (0.004)
Cylinder barrel	Camshaft journal I.D.		14.000 – 14.018 (0.5512 – 0.5519)	14.048 (0.5531)
Crankcase cover	Camshaft journal I.D.		14.000 – 14.027 (0.5512 – 0.5522)	14.048 (0.5531)
Valves	Valve clearance	IN	0.15 ± 0.02 (0.006 ± 0.001)	–
		EX	0.20 ± 0.02 (0.008 ± 0.001)	–
	Valve stem O.D.	IN	5.468 – 5.480 (0.2153 – 0.2157)	5.318 (0.2094)
		EX	5.425 – 5.440 (0.2136 – 0.2142)	5.275 (0.2077)
	Valve guide I.D.	IN/EX	5.500 – 5.512 (0.2165 – 0.2170)	5.572 (0.2194)
	Guide-to-stem clearance	IN	0.020 – 0.044 (0.0008 – 0.0017)	0.10 (0.004)
		EX	0.060 – 0.087 (0.0024 – 0.0034)	0.12 (0.005)
	Valve seat width	IN/EX	0.70 – 0.90 (0.028 – 0.035)	2.0 (0.08)
	Valve spring free length		30.5 (1.20)	29.0 (1.14)
	Valve spring perpendicularity		–	1.5° max.
Camshaft	Cam height	IN	27.500 – 27.900 (1.0827 – 1.0984)	27.450 (1.0807)
		EX	27.547– 27.947 (1.0845 – 1.1003)	27.500 (1.0827)
	Camshaft O.D.		13.966 – 13.984 (0.5498 – 0.5506)	13.916 (0.5479)
Carburetor	Main jet	BEA2F A	#72	–
	Pilot screw opening		2-3/8 turns out	–
	Float height		13.7 (0.54)	–
Spark plug	Gap		0.70 – 0.80 (0.028 – 0.031)	–
Spark plug cap	Resistance (20°C/68°F)		7.5 – 12.5 kΩ	–
Ignition coil	Air gap		0.2 – 0.6 (0.01 – 0.02)	–
	Primary resistance		0.68 – 0.92 Ω	–
	Secondary resistance		5.6 – 8.4 kΩ	–

GP200H

Unit: mm (in)

Part	Item		Standard	Service limit
Engine	Maximum speed (at no load)		3,850 ± 150 min^{-1} (rpm)	–
	Idle speed		1,400 $^{+200}_{-150}$ min^{-1} (rpm)	–
	Cylinder compression		0.35 MPa (3.6 kgf/cm^2, 51 psi)/600 min^{-1} (rpm)	–
Cylinder head	Warpage		–	0.10 (0.004)
Cylinder	Sleeve I.D.		68.000 – 68.020 (2.6772 – 2.6779)	68.165 (2.6837)
Piston	Skirt O.D.		67.965 – 67.982 (2.6758 – 2.6765)	67.845 (2.6711)
	Piston-to-cylinder clearance		0.018 – 0.055 (0.0007 – 0.0022)	0.12 (0.005)
	Piston pin bore I.D.		18.002 – 18.008 (0.7087 – 0.7090)	18.048 (0.7105)
Piston pin	Pin O.D.		17.992 – 17.998 (0.7083 – 0.7086)	17.954 (0.7068)
	Piston pin-to-piston pin bore clearance		0.004 – 0.016 (0.0002 – 0.0006)	0.06 (0.002)
Piston rings	Ring side clearance	Top	0.035 – 0.070 (0.0014 – 0.0028)	0.15 (0.006)
		Second	0.045 – 0.080 (0.0018 – 0.0032)	0.15 (0.006)
	Ring end gap	Top	0.200 – 0.350 (0.0079 – 0.0138)	1.0 (0.04)
		Second	0.350 – 0.500 (0.0138 – 0.0197)	1.0 (0.04)
		Oil (side rail)	0.20 – 0.70 (0.008 – 0.028)	1.0 (0.04)
	Ring width	Top	0.950 – 0.970 (0.0374 – 0.0382)	0.93 (0.037)
		Second	0.940 – 0.960 (0.0370 – 0.0378)	0.92 (0.036)
Connecting rod	Small end I.D.		18.006 – 18.017 (0.7089 – 0.7093)	18.07 (0.711)
	Big end side clearance		0.30 – 0.70 (0.012 – 0.018)	1.1 (0.04)
	Big end I.D.		30.015 – 30.025 (1.1817 – 1.1821)	30.066 (1.1837)
	Big end oil clearance		0.035 – 0.055 (0.0014 – 0.0022)	0.12 (0.005)
Crankshaft	Crankpin O.D.		29.970 – 29.980 (1.1799 – 1.1803)	29.92 (1.178)
	Crankshaft runout		–	0.10 (0.004)
Cylinder barrel	Camshaft journal I.D.		14.000 – 14.018 (0.5512 – 0.5519)	14.048 (0.5531)
Crankcase cover	Camshaft journal I.D.		14.000 – 14.027 (0.5512 – 0.5522)	14.048 (0.5531)
Valves	Valve clearance	IN	0.15 ± 0.02 (0.006 ± 0.001)	–
		EX	0.20 ± 0.02 (0.008 ± 0.001)	–
	Valve stem O.D.	IN	5.468 – 5.480 (0.2153 – 0.2157)	5.318 (0.2094)
		EX	5.425 – 5.440 (0.2136 – 0.2142)	5.275 (0.2077)
	Valve guide I.D.	IN/EX	5.500 – 5.512 (0.2165 – 0.2170)	5.572 (0.2194)
	Guide-to-stem clearance	IN	0.020 – 0.044 (0.0008 – 0.0017)	0.10 (0.004)
		EX	0.060 – 0.087 (0.0024 – 0.0034)	0.12 (0.005)
	Valve seat width	IN/EX	0.70 – 0.90 (0.028 – 0.035)	2.0 (0.08)
	Valve spring free length		30.5 (1.20)	29.0 (1.14)
	Valve spring perpendicularity		–	1.5° max.
Camshaft	Cam height	IN	27.500 – 27.900 (1.0827 – 1.0984)	27.450 (1.0807)
		EX	27.547 – 27.947 (1.0845 – 1.1003)	27.500 (1.0827)
	Camshaft O.D.		13.966 – 13.984 (0.5498 – 0.5506)	13.916 (0.5479)
Carburetor	Main jet	BE69G A	#78	–
	Pilot screw opening		2-1/2 turns out	–
	Float height		13.7 (0.54)	–
Spark plug	Gap		0.70 – 0.80 (0.028 – 0.031)	–
Spark plug cap	Resistance (20°C/68°F)		7.5 – 12.5 kΩ	–
Ignition coil	Air gap		0.2 – 0.6 (0.01 – 0.02)	–
	Primary resistance		0.68 – 0.92 Ω	–
	Secondary resistance		5.6 – 8.4 kΩ	–

TORQUE VALUES

Item	Thread Dia. (mm)	Torque values			Remark
		N·m	kgf·m	lbf·ft	
Crankcase cover bolt	M8 x 1.25	24	2.4	18	
Cylinder head bolt	M8 x 1.25	24	2.4	18	Apply engine oil to the threads and seating surface.
Engine oil drain plug bolt	M10 x 1.25	18	1.8	13	
Connecting rod bolt	M7 x 1.0	12	1.2	9	Apply engine oil to the threads and seating surface.
Rocker arm pivot bolt	M8 x 1.25 (Special bolt)	24	2.4	18	Apply engine oil to the threads and pivot.
Rocker arm pivot lock nut	M6 x 0.5 (Special nut)	10	1.0	7	
Spark plug	M14 x 1.25 (Special)	18	1.8	13	
Oil level switch joint nut	M10 x 1.25	10	1.0	7	
Flywheel nut	M14 x 1.5 (Special nut)	75	7.5	55	Apply engine oil to the threads and seating surface.
Fuel tank nut/bolt	M6 x 1.0	10	1.0	7	
Fuel tank joint	M10 x 1.25	2	0.2	1.5	
Air cleaner mount nut	M6 x 1.0	9	0.9	6.6	
Muffler nut	M8 x 1.25	24	2.4	18	
Muffler stay bolt (GP200H only)	M6 x 1.0	12	1.2	9	
Recoil starter set screw	M6 x 1.0 (Special screw)	10	1.0	7.0	

STANDARD TORQUE VALUES

Item	Thread Dia. (mm)	Torque values		
		N·m	kgf·m	lbf·ft
Screw	M4	2.1	0.2	1.5
	M5	4.3	0.4	3.2
	M6	9	0.9	6.6
Bolt and nut	M5	5.3	0.5	3.9
	M6	10	1.0	7
	M8	22	2.2	16
	M10	34	3.5	25
	M12	54	5.5	40
Flange bolt and nut	M5	5.3	0.5	3.9
	M6	12	1.2	9
	M8	23	2.3	17
	M10	40	4.1	30
SH (Small head) flange bolt	M6	9	0.9	6.6
CT (Cutting threads) flange bolt (Retightening)	M5	5.4	0.6	4.0
	M6	12	1.2	9

LUBRICATION & SEAL POINTS

Material	Location	Remarks
Engine oil	Crankshaft pin and gear teeth	
	Piston outer surface, ring groove and piston pin hole	
	Piston pin outer surface	
	Piston ring entire surface	
	Cylinder inner surface	
	Connecting rod big and small end bearing	
	Connecting rod bolt threads and seating surface	
	Camshaft cam profile and journal	
	Valve lifter pivot, pivot end and slipper surface	
	Valve stem sliding surface and stem end	
	Valve rocker arm tappet surface and pivot	
	Rocker arm pivot threads and pivot	
	Flywheel nut threads and seating surface	
	Governor weight holder gear and sliding surface	
	Governor holder shaft journal	
	Governor arm shaft journal	
	Cylinder head bolt threads and seating surface	
Multi-purpose grease	Oil seal lips	
	Control lever sliding surface	
	Recoil starter case reel sliding surface	
	Recoil starter ratchet sliding surface	
	Recoil starter ratchet guide inside	
Use molybdenum oil solution (mixture of the engine oil and molybdenum grease in a ratio of 1:1)	Camshaft cam profile	When installing a new camshaft
LOCTITE® 638 or equivalent	Limiter cap inside	
ThreeBond® 1216E or equivalent	Crankcase cover mating surface	
ThreeBond® 2430 or equivalent	Recoil starter set screw threads	

TOOLS

Float level gauge 07401-0010000 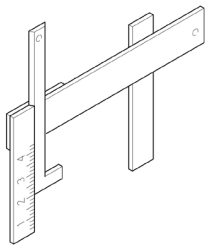	Bearing driver attachment, 37 x 40 mm 07746-0010200 	Bearing driver attachment, 52 x 55 mm 07746-0010400 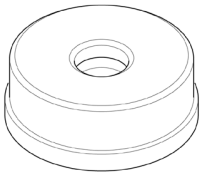
Pilot, 25 mm 07746-0040600 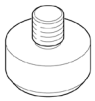	Driver handle 07749-0010000 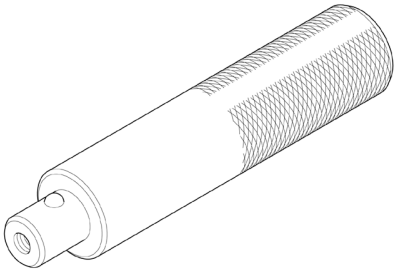	Seat cutter, 24.5 mm (45° EX) 07780-0010100
Seat cutter, 27.5 mm (45° IN) 07780-0010200 	Flat cutter, 28 mm (32° IN) 07780-0012100 	Flat cutter, 24 mm (32° EX) 07780-0012500
Interior cutter, 22 mm (60° EX) 07780-0014202 	Interior cutter, 26 mm (60° IN) 07780-0014500 	Cutter holder, 5.5 mm 07781-0010101 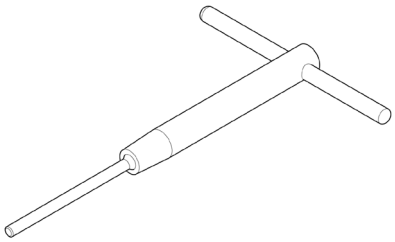

Valve guide reamer, 5.510 mm
07984-2000001

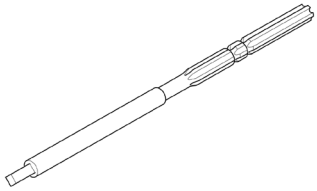

HARNESS AND TUBE ROUTING

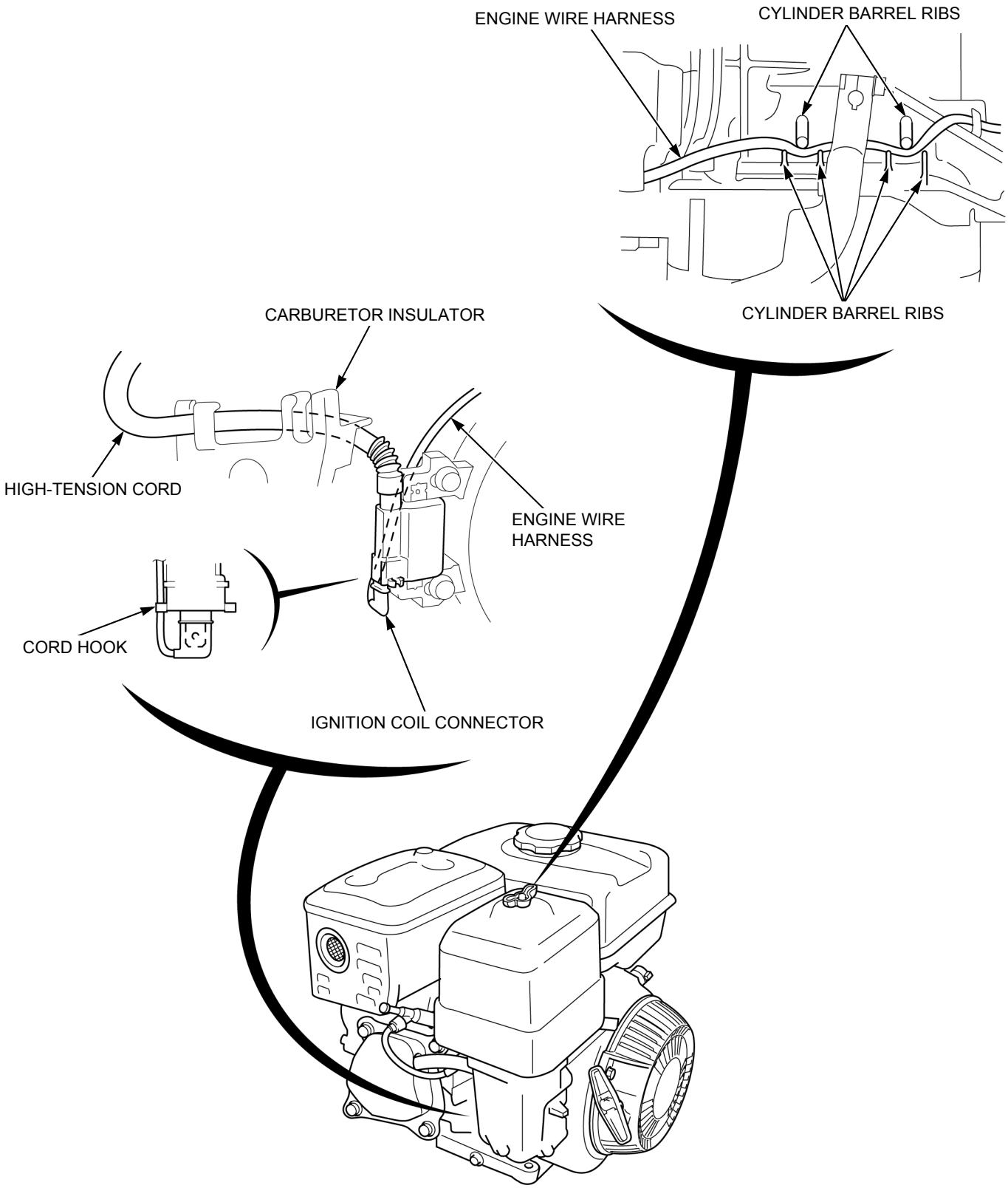

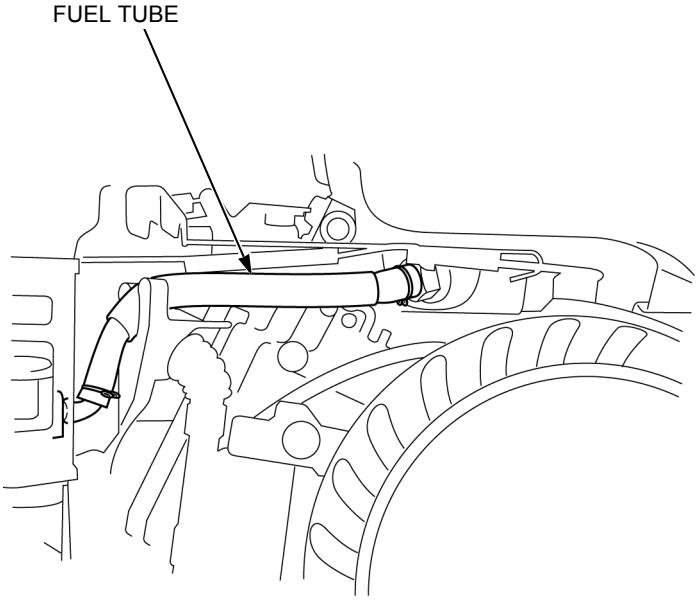
FUEL TUBE

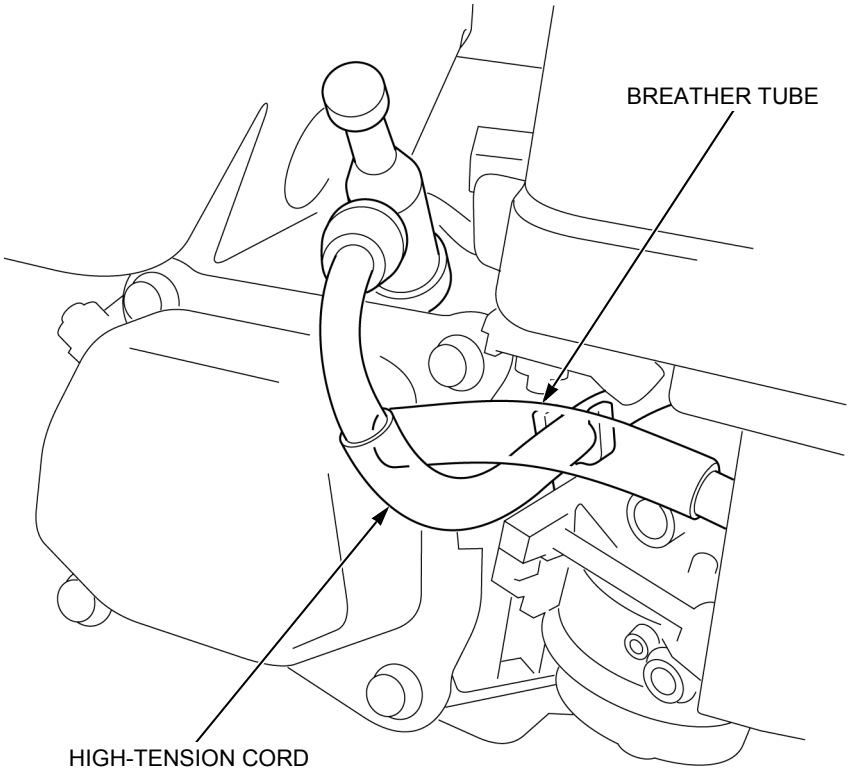
BREATHER TUBE
HIGH-TENSION CORD

WITH ENGINE STOP SWITCH:

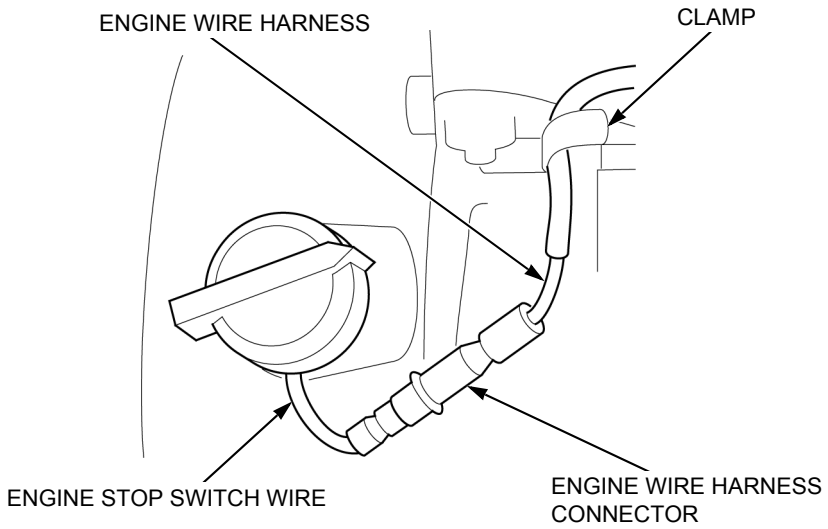

WITH ENGINE STOP SWITCH AND OIL ALERT UNIT:

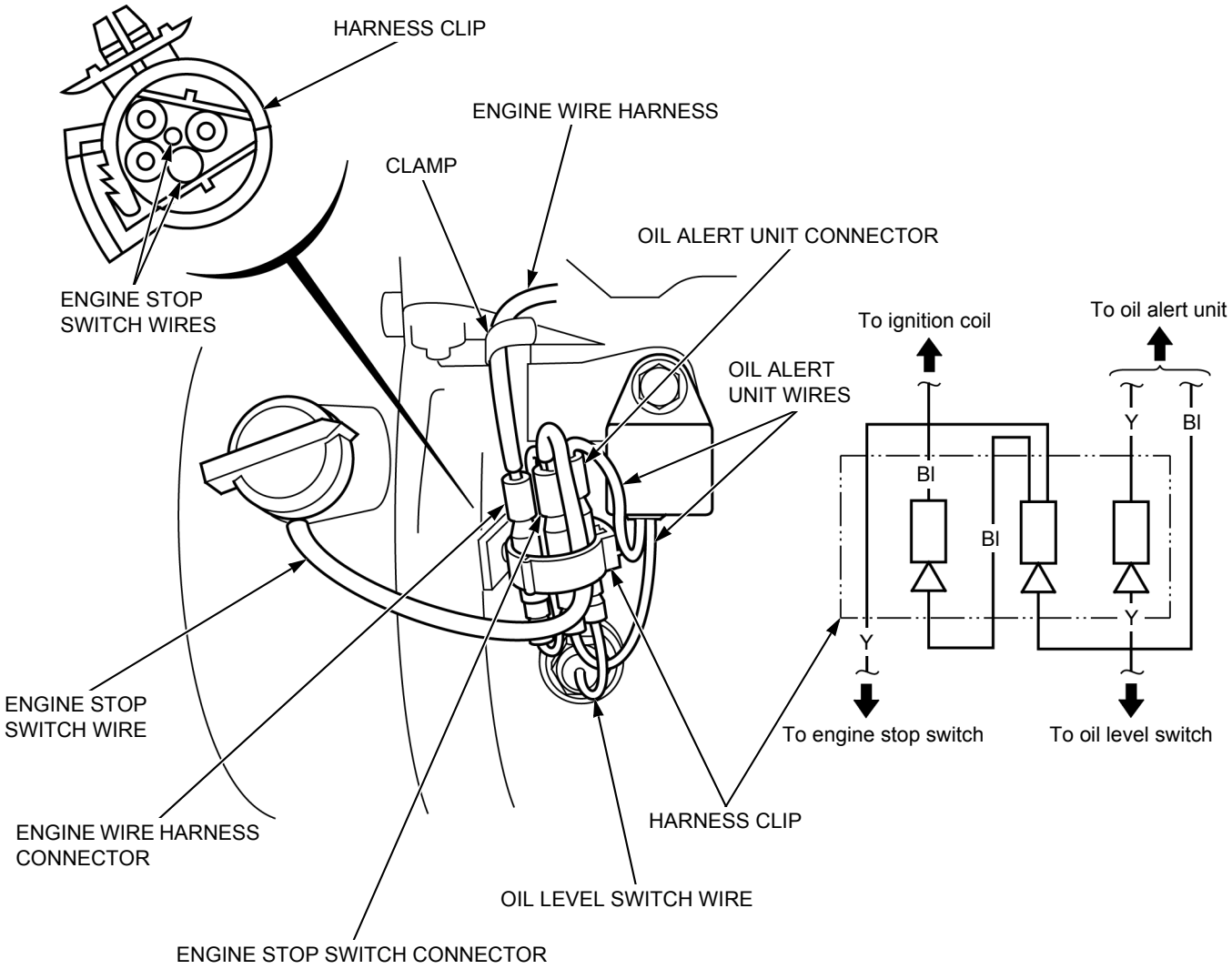

MAINTENANCE SCHEDULE ····· 3-2

ENGINE OIL LEVEL CHECK/CHANGE····· 3-3

AIR CLEANER
CHECK/CLEANING/REPLACEMENT ····· 3-4

SPARK PLUG CHECK/ADJUSTMENT ····· 3-5

SPARK PLUG REPLACEMENT ····· 3-6

IDLE SPEED CHECK/ADJUSTMENT ····· 3-6

VALVE CLEARANCE
CHECK/ADJUSTMENT ····· 3-7

COMBUSTION CHAMBER CLEANING····· 3-8

FUEL TANK AND FILTER CLEANING····· 3-9

FUEL TUBE CHECK ····· 3-9

MAINTENANCE SCHEDULE

ITEM	Perform at every indicated month or operating hour interval, whichever comes first.	REGULAR SERVICE PERIOD (2)					Refer to page
		Each use	First month or 20 hrs.	Every 3 months or 50 hrs.	Every 6 months or 100 hrs.	Every year or 300 hrs.	
Engine oil	Check level	○					3-3
	Change		○		○		3-3
Air cleaner	Check	○					3-4
	Clean			○ (1)	○ (*) (1)		3-4
	Replace					○ (**)	3-4
Spark plug	Check–adjust				○		3-5
	Replace					○	3-6
Idle speed	Check–adjust					○	3-6
Valve clearance	Check–adjust					○	3-7
Combustion chamber	Clean	After every 500 hours					3-8
Fuel tank and filter	Clean				○		3-9
Fuel tube	Check	Every 2 years (Replace if necessary)					3-9

(1) Service more frequently when used in dusty areas.

(2) For commercial use, log hours of operation to determine proper maintenance intervals.

(*) Internal vent carburetor with dual element type only.

(**) Replace paper element type only.

ENGINE OIL LEVEL CHECK/CHANGE

CHECK

Place the engine on a level surface.

Remove the oil filler cap [1] and check the oil level shown into the oil filler neck [2].

If the oil level is low, fill with recommended oil to the upper level of the oil filler neck.

Check that the oil filler packing [3] is in good condition, replace it if necessary.

Install and tighten the oil filler cap securely.

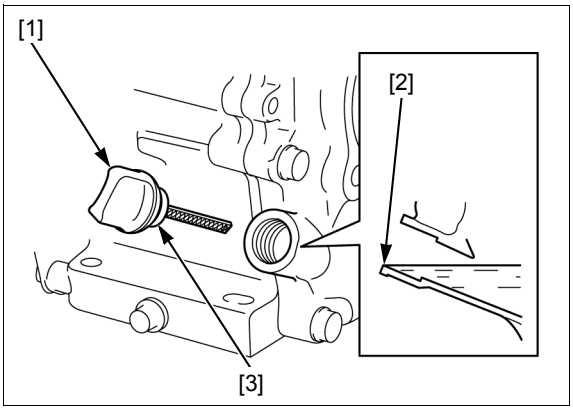

CHANGE

Place the engine on a level surface and place a suitable container under the drain plug bolt [1].

Remove the oil filler cap [2], drain plug bolt, and drain plug washer [3] and drain the oil into a suitable container.

Please dispose of used oil in a manner that is compatible with the environment. We suggest you take used oil in a sealed container to your local recycling center or service station for reclamation. Do not throw it in the trash, pour it on the ground, or pour it down a drain.

⚠ CAUTION

Used engine oil contains substances that have been identified as carcinogenic. If repeatedly left in contact with the skin for prolonged periods, it may cause skin cancer. Wash your hands thoroughly with soap and water as soon as possible after contact with used engine oil.

Install the drain plug bolt with a new drain plug washer and tighten it to the specified torque.

TORQUE: 18 N·m (1.8 kgf·m, 13 lbf·ft)

SAE 10W - 30 is recommended for general use. Other viscosities shown in the chart may be used when the average temperature in your area is within the recommended range.

Add the specified amount of recommended oil into the engine.

ENGINE OIL CAPACITY:
GP160H: 0.58 liter (0.61 US qt, 0.51 Imp qt)
GP200H: 0.60 liter (0.63 US qt, 0.53 Imp qt)

RECOMMENDED OIL:
SAE 10W-30
API service classification: SE or higher

After adding the oil, check the oil level.

Check that the oil filler packing [4] is in good condition, replace it if necessary.

Install and tighten the oil filler cap securely.

Make sure there are no oil leaks.

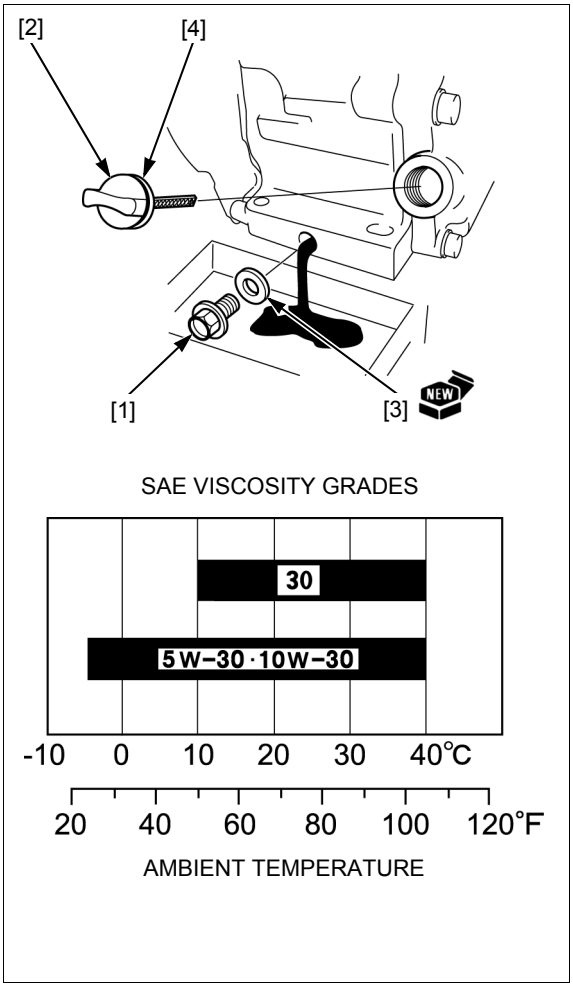

AIR CLEANER CHECK/CLEANING/REPLACEMENT

A dirty air filter will restrict air flow to the carburetor, reducing engine performance. If the engine is operated in dusty areas, clean the air cleaner more often than specified in the MAINTENANCE SCHEDULE.

NOTICE

Operating the engine without the air filters or with the filter installed loosely will allow dirt to enter the engine, causing rapid engine wear. Install the air filters securely.

Remove the following:

- Wing nut [1]
- Air cleaner cover [2]
- Wing nut [3]
- Element Assy.
  - Grommet [4]
  - Inner filter (Paper) [5]
  - Outer filter (Foam) [6]

Carefully check both filters for holes or tears and replace if damaged.

Clean the filters if they are to be reused (page 3-4).

Installation is in the reverse order of removal.

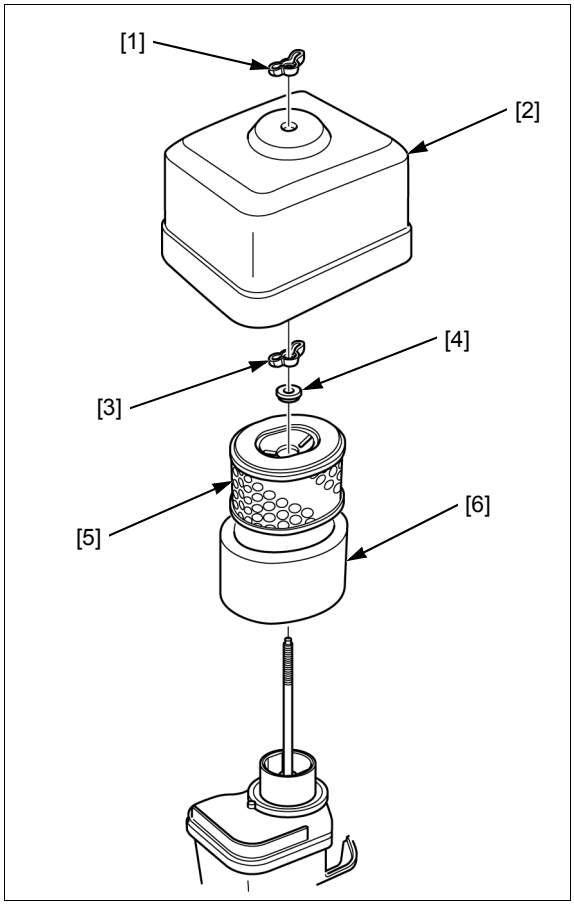

ELEMENT CLEANING

FOAM

Clean the filter [1] in warm soapy water, rinse, and allow to dry thoroughly, or clean with a non-flammable solvent and allow to dry thoroughly.

Dip the filter in clean engine oil, and squeeze out all the excess oil.

Excess oil will restrict air flow through the foam element and may cause the engine to smoke at startup.

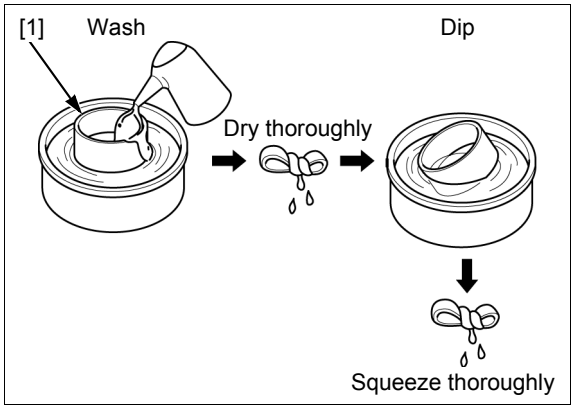

PAPER

Tap the inner filter [1] lightly several times on a hard surface to remove excess dirt, or blow compressed air lightly (206 kPa (2.11 kgf/cm^2, 30 psi) or less) through the paper filter from the inside out. Never try to brush the dirt off; brushing will force dirt into the fibers.

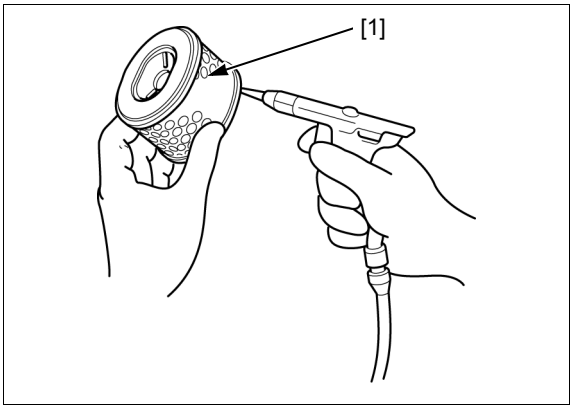

SPARK PLUG CHECK/ADJUSTMENT

Remove the spark plug (page 3-6).

Clean the spark plug [1] electrodes with a wire brush [2] or special plug cleaner.

Check the following and replace if necessary.

– Insulator [3] and sealing washer [4] for damage
– Center electrode [5] and side electrode [6] for wear
– Burning condition, coloration

RECOMMENDED SPARK PLUG:
BPR6ES (NGK)
W20EPR-U (DENSO)

Measure the plug gap with a wire-type feeler gauge.

PLUG GAP: 0.70 – 0.80 mm (0.028 – 0.031 in)

If the measurement is out of the specification, adjust by bending the side electrode.

Install the spark plug (page 3-6).

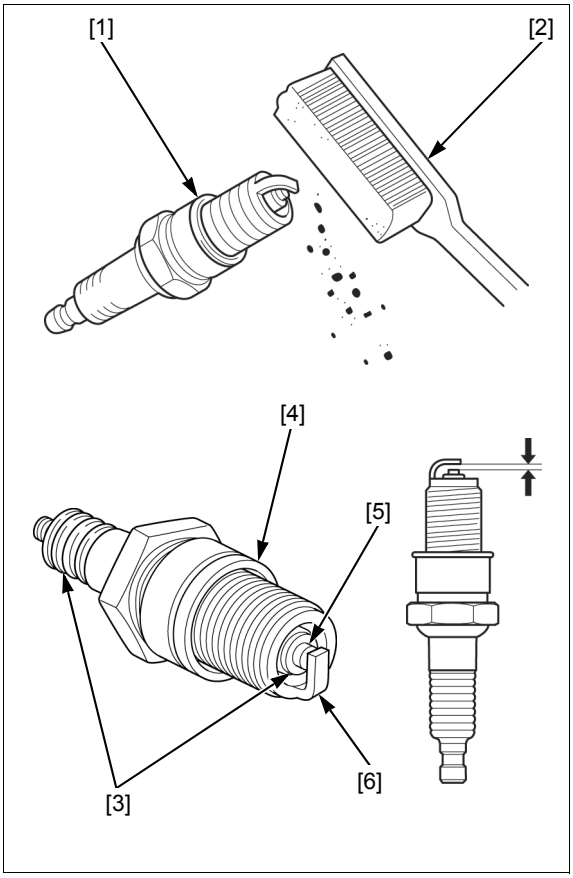

SPARK PLUG REPLACEMENT

REMOVAL

⚠ CAUTION

The engine and the muffler becomes very hot during operation and remains hot for a while after stopping the engine. Be careful not to touch the muffler while it is hot. Allow it to cool before proceeding.

Disconnect the spark plug cap [1] and remove the spark plug [2].

NOTE:

- Clean around the spark plug base with compressed air before removing the spark plug and be sure that no debris is allowed to enter into the combustion chamber.

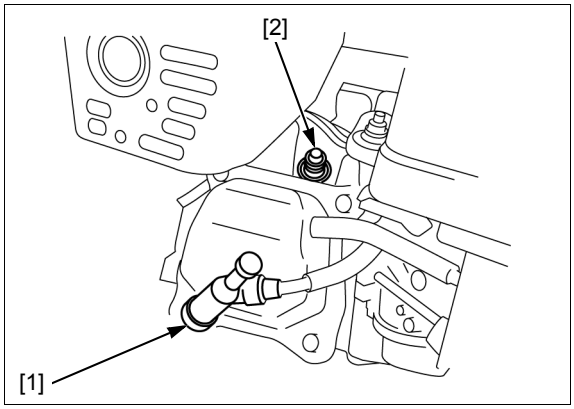

INSTALLATION

Install and hand tighten the spark plug to the cylinder head.

RECOMMENDED SPARK PLUG:
BPR6ES (NGK)
W20EPR-U (DENSO)

Tighten the spark plug to the specified torque.

TORQUE: 18 N·m (1.8 kgf·m, 13 lbf·ft)

Connect the spark plug cap.

IDLE SPEED CHECK/ADJUSTMENT

Ensure the governor arm and governor arm shaft are installed correctly (page 7-5).

Use a tachometer with graduations of 50 min^{-1} (rpm) or smaller that will accurately indicate 50 min^{-1} (rpm) change.

Start the engine and allow it to warm up to normal operating temperature.

Turn the throttle stop screw [1] to obtain the specified idle speed.

IDLE SPEED: 1,400 $^{+200}_{-150}$ min^{-1} (rpm)

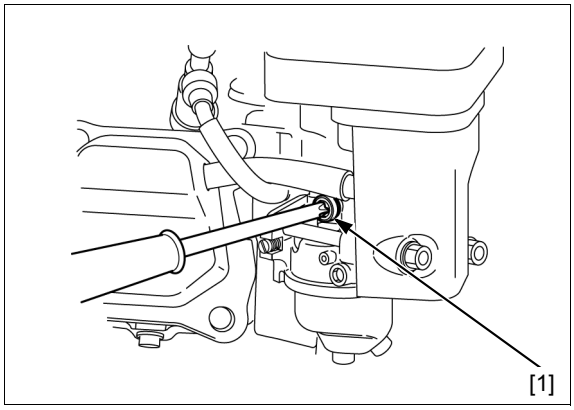

VALVE CLEARANCE CHECK/ ADJUSTMENT

NOTICE

Inspect and adjust the valve clearance while the engine is cold.

CHECK

Disconnect the spark plug cap [1] and remove the following:

– Breather tube [2]
– Head cover bolt (6 x 12 mm) [3] (4)
– Head cover [4]
– Head cover packing [5]

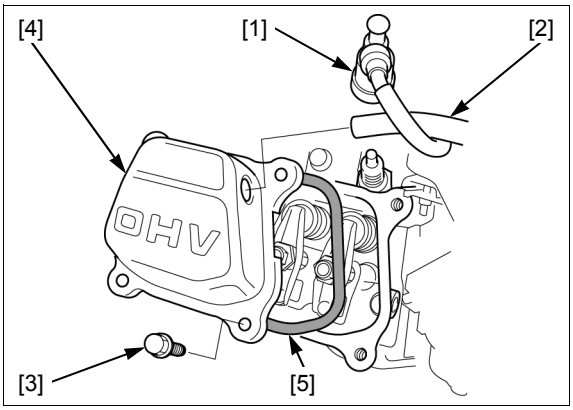

Set the piston near top dead center of the cylinder compression stroke (both valves fully closed) by pulling the recoil starter slowly. When the piston is near top dead center of the compression stroke, the triangle mark [1] on the starter pulley [2] will align with the top hole [3] on the recoil starter case [4].

If the exhaust valve is open, use the recoil starter to turn the crankshaft one additional turn and align the triangle mark with the top hole again.

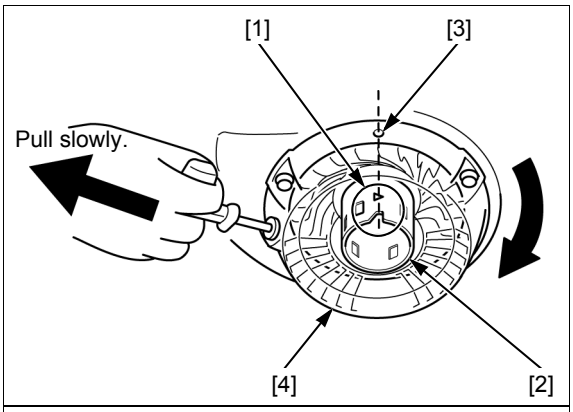

Insert a feeler gauge [1] between the valve rocker arm [2] and valve stem [3] to measure the valve clearance.

VALVE CLEARANCE:
IN: 0.15 ± 0.02 mm (0.006 ± 0.001 in)
EX: 0.20 ± 0.02 mm (0.008 ± 0.001 in)

If adjustment is necessary, proceed as follows.

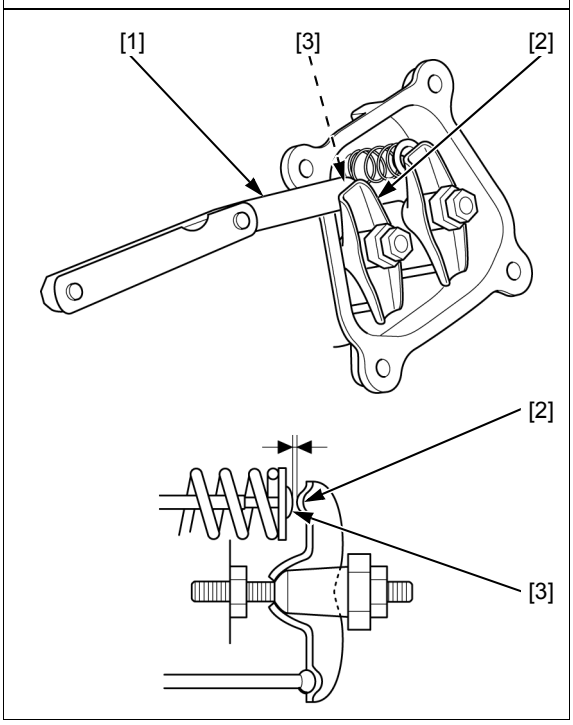

ADJUSTMENT

Hold the rocker arm pivot [1] and loosen the pivot lock nut [2].

Insert a feeler gauge [3] between the valve rocker arm and the valve stem.

Adjust by turning the rocker arm pivot until there is a slight drag on the feeler gauge.

VALVE CLEARANCE:
IN: 0.15 ± 0.02 mm (0.006 ± 0.001 in)
EX: 0.20 ± 0.02 mm (0.008 ± 0.001 in)

Hold the rocker arm pivot and retighten the pivot lock nut to the specified torque.

TORQUE: 10 N·m (1.0 kgf·m, 7 lbf·ft)

Recheck the valve clearance, and if necessary, readjust the clearance.

Replace the head cover packing with a new one and install the removed parts in the reverse order of removal.

NOTE:
- Route the high-tension cord and breather tube properly (page 2-8).

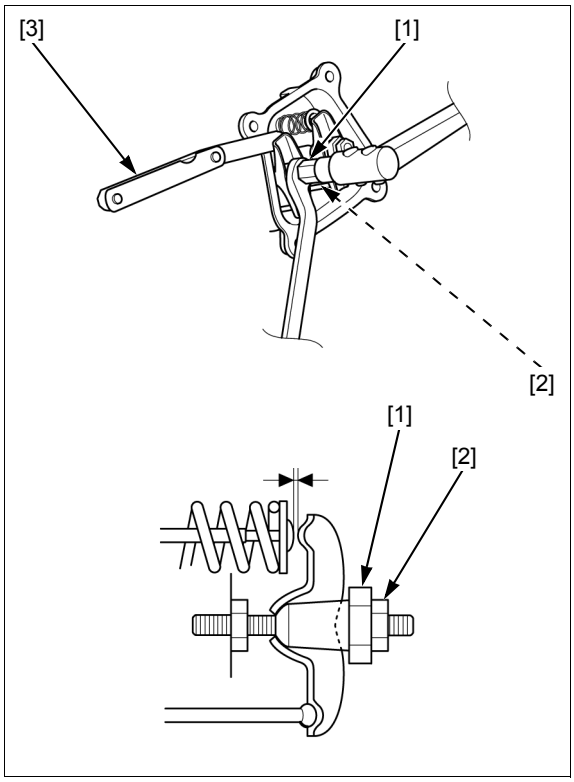

COMBUSTION CHAMBER CLEANING

Remove the cylinder head (page 12-3).

Clean any carbon deposits from the combustion chamber [1].

Installation is in the reverse order of removal.

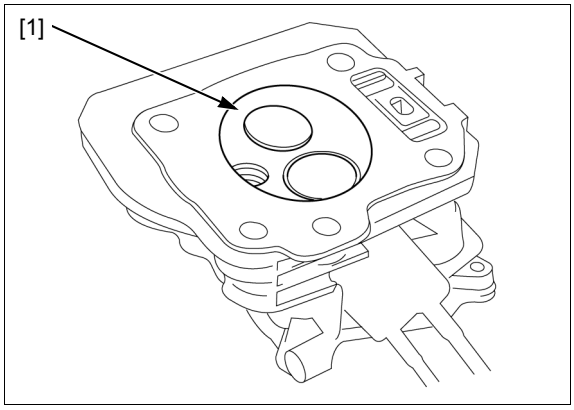

FUEL TANK AND FILTER CLEANING

⚠WARNING

Gasoline is highly flammable and explosive. You can be burned or seriously injured when handling fuel.
- Keep heat, sparks, and flame away.
- Handle fuel only outdoors.
- Wipe up spills immediately.

Remove the fuel tank (page 6-3).

Remove the fuel tank joint [1] and O-ring [2] from the fuel tank [3].

Clean the fuel tank joint and fuel tank with non-flammable solvent, and allow them to dry thoroughly.

Check the screen of the fuel tank joint for clogs or damage, replace if necessary.

Install a new O-ring to the fuel tank joint and install them to the fuel tank.

Tighten the fuel tank joint to the specified torque.

TORQUE: 2 N·m (0.2 kgf·m, 1.5 lbf·ft)

Install the fuel tank (page 6-3).

After installation, check for any signs of fuel leakage.

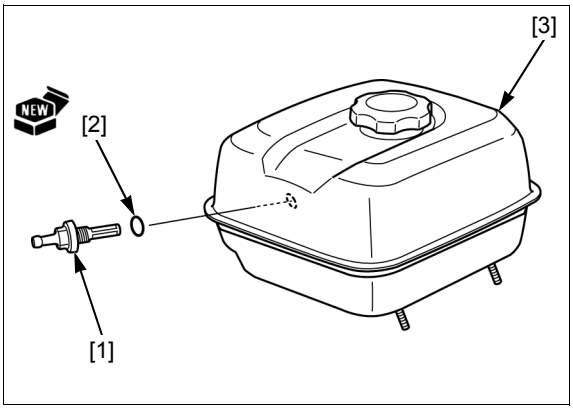

FUEL TUBE CHECK

⚠WARNING

Gasoline is highly flammable and explosive. You can be burned or seriously injured when handling fuel.
- Keep heat, sparks, and flame away.
- Handle fuel only outdoors.
- Wipe up spills immediately.

Remove the fan cover (page 5-2).

Check the fuel tube [1] for deterioration, cracks or signs of leakage.

Replace if necessary.

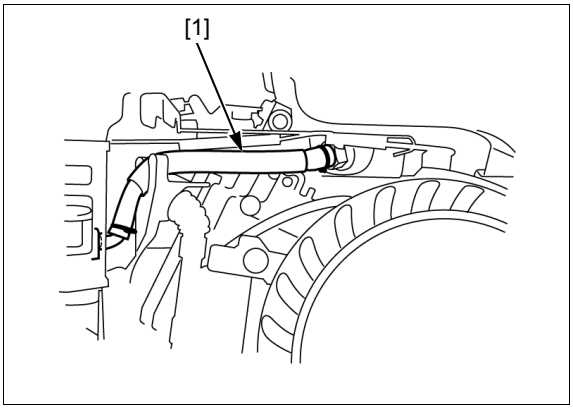

MEMO

4. TROUBLESHOOTING

4

BEFORE TROUBLESHOOTING ····· 4-2
TROUBLESHOOTING ····· 4-2

BEFORE TROUBLESHOOTING

- Check that the connectors are connected securely.
- Check for sufficient fresh fuel in the fuel tank.
- Read the circuit tester's operation instructions carefully, and observe the instructions during inspection.

TROUBLESHOOTING

ENGINE DOES NOT CRANK

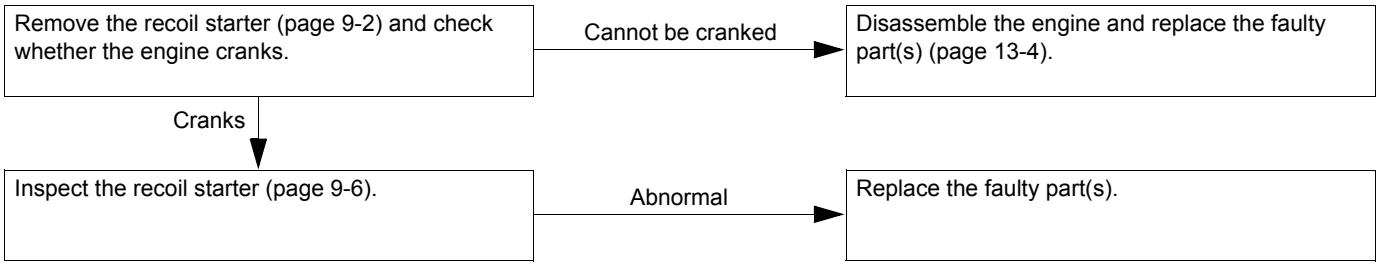

ENGINE CRANKS BUT WON'T START

- Check the oil level before troubleshooting (page 3-3).

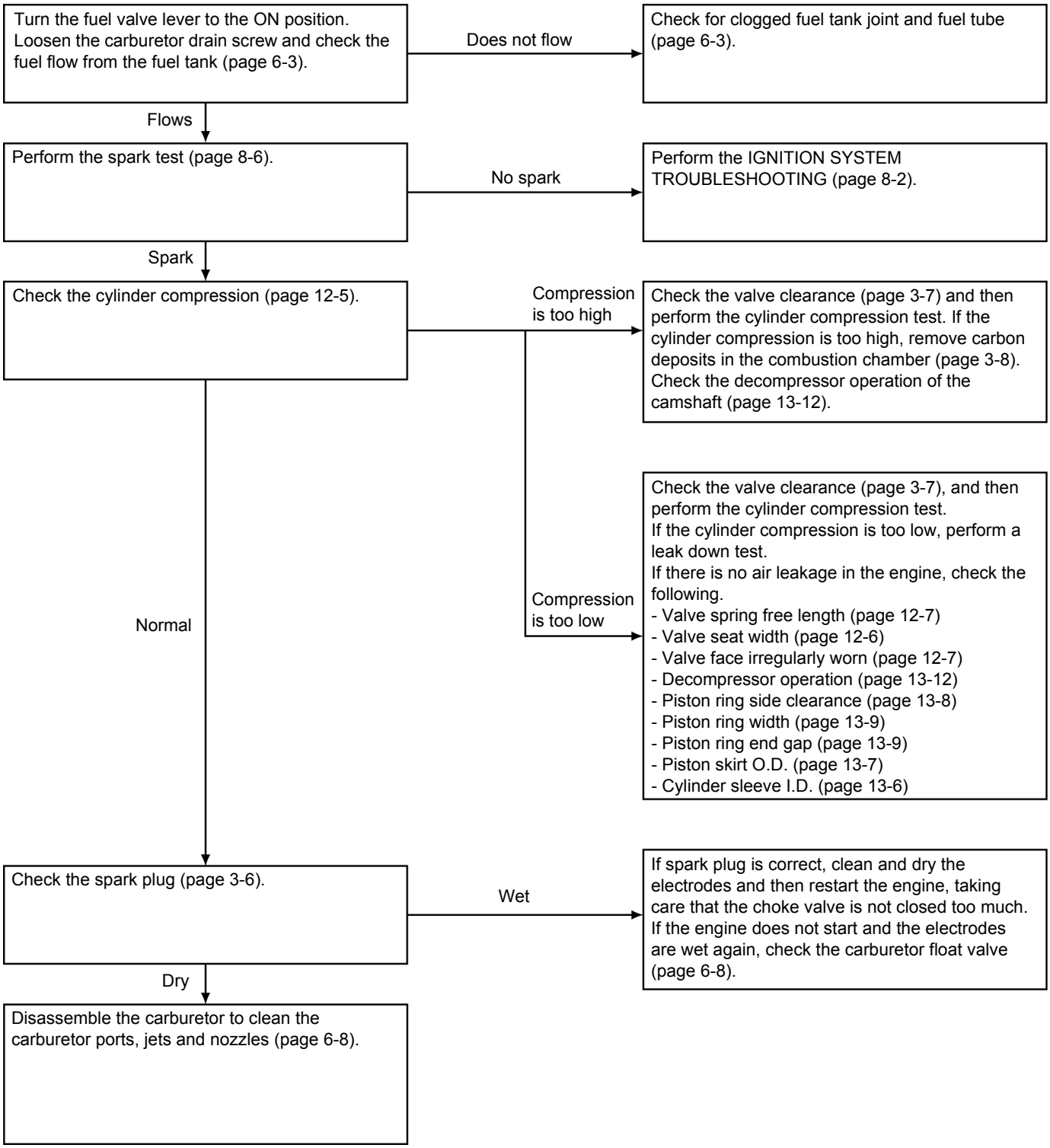

ENGINE SPEED DOES NOT INCREASE OR STABILIZE

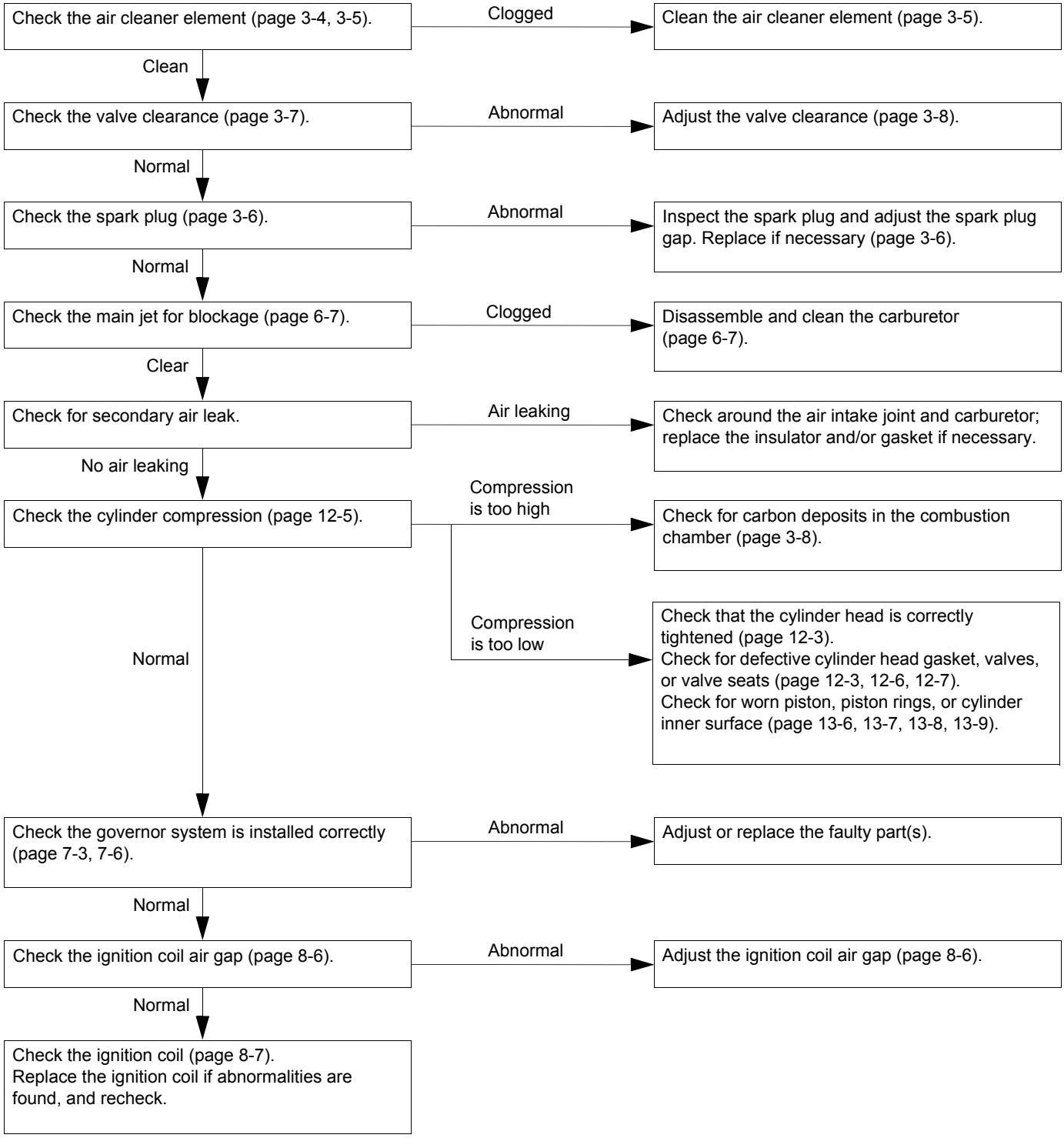

ENGINE DOES NOT STOP WHEN ENGINE STOP SWITCH IS TURNED OFF

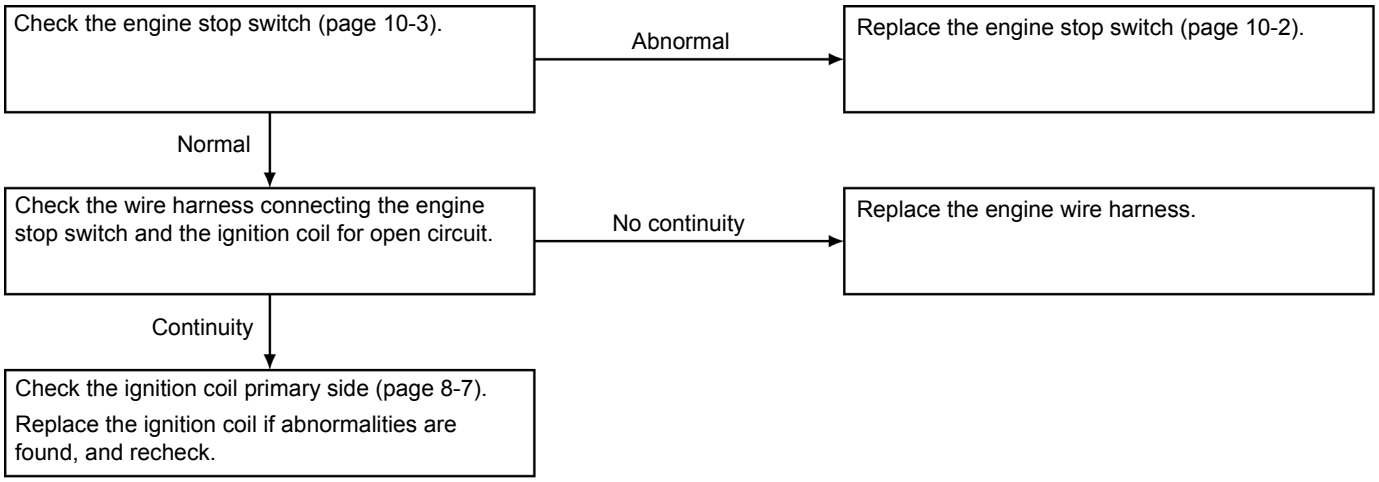

ENGINE DOES NOT STOP WHEN ENGINE OIL LEVEL IS LOW (WITH OIL LEVEL SWITCH AND OIL ALERT UNIT TYPE ONLY)

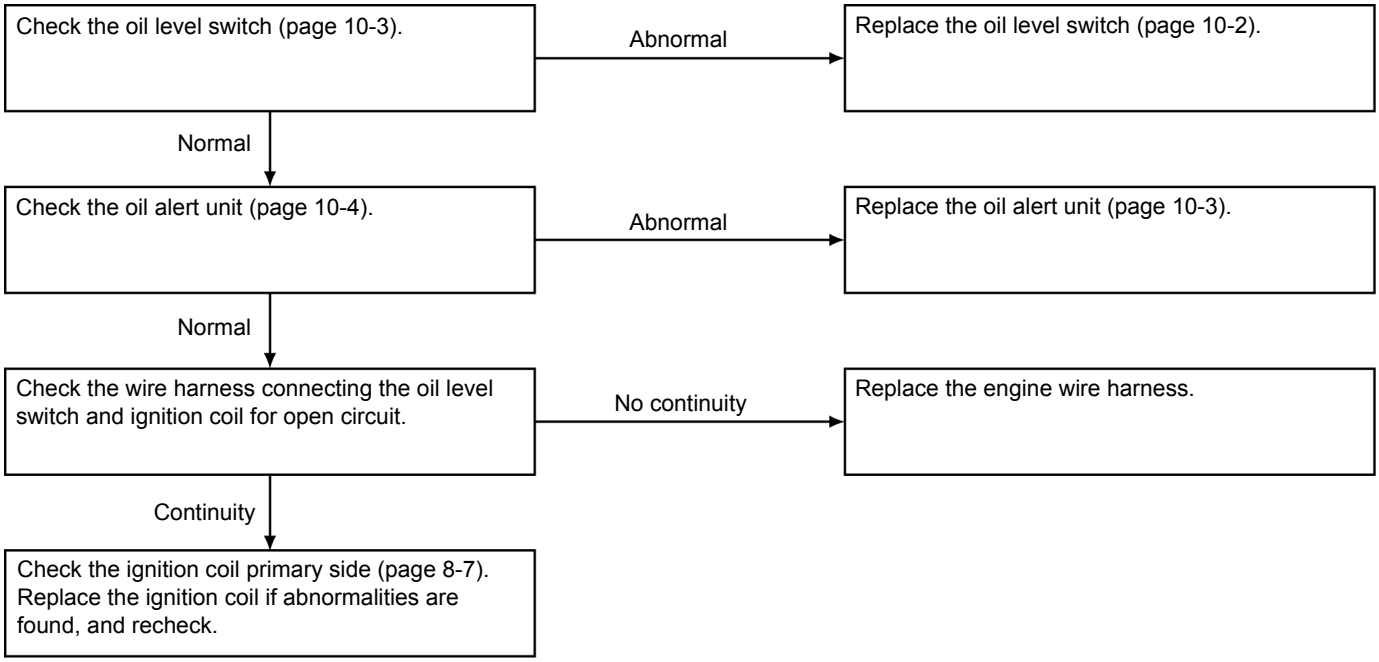

MEMO

5. FAN COVER

5

FAN COVER REMOVAL/INSTALLATION ·· 5-2

FAN COVER REMOVAL/INSTALLATION

When disassembling the fan cover, remove the following:

– Recoil starter (page 9-2)
– Engine stop switch (page 10-2)

NOTE:

- Route the tube and wires properly (page 2-8).

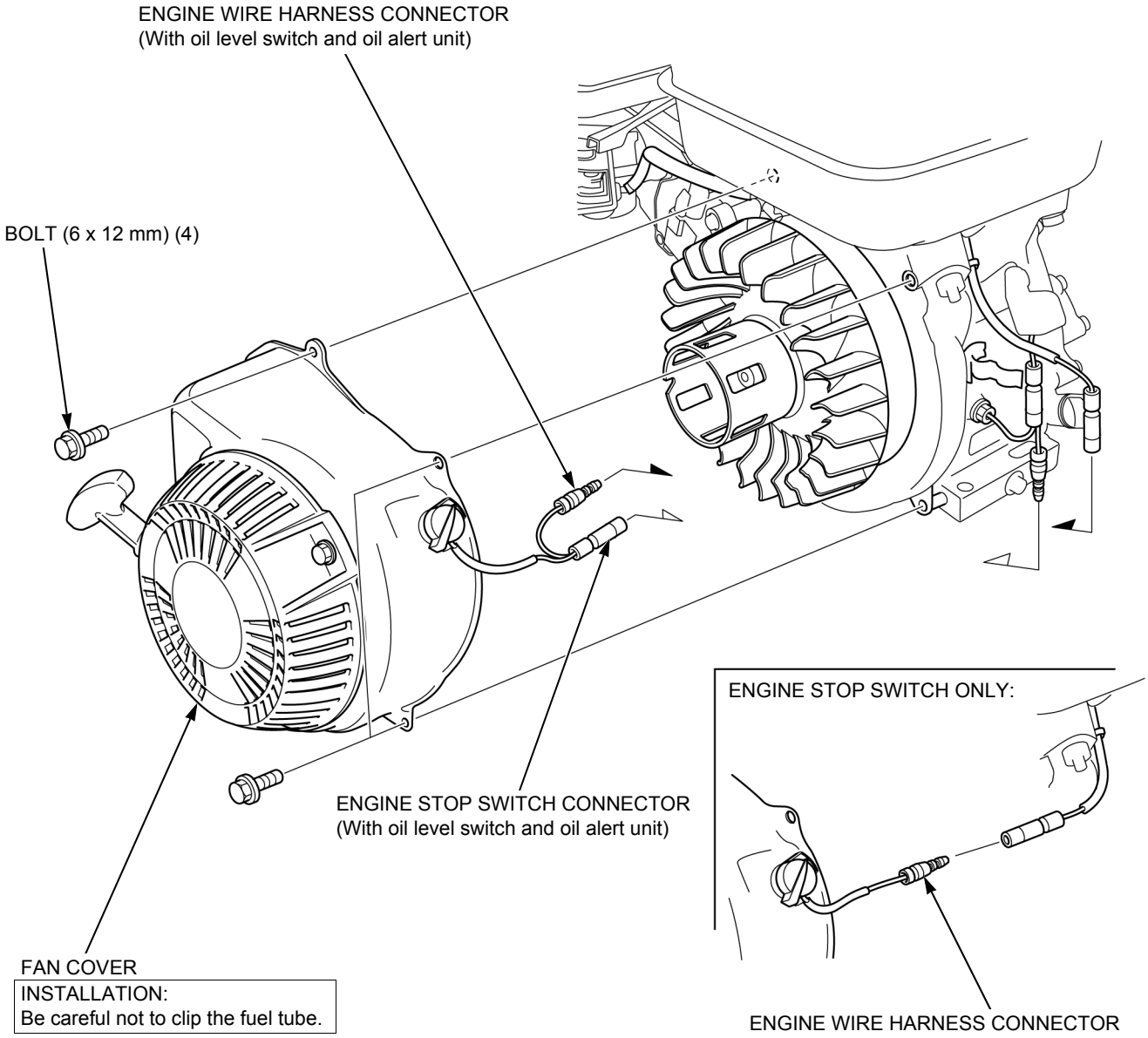

6. FUEL SYSTEM

6

TOOL ····· 6-2

FUEL TANK REMOVAL/INSTALLATION ··· 6-3

AIR CLEANER REMOVAL/INSTALLATION ····· 6-4

CARBURETOR REMOVAL/INSTALLATION ····· 6-5

CARBURETOR DISASSEMBLY/ASSEMBLY ····· 6-6

CARBURETOR BODY CLEANING ····· 6-7

CARBURETOR INSPECTION ····· 6-7

PILOT SCREW REPLACEMENT ····· 6-8

CHOKE REPLACEMENT ····· 6-9

CARBURETOR STUD BOLT REPLACEMENT ····· 6-9

TOOL

Float level gauge
07401-0010000

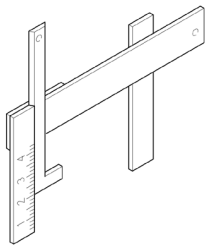

FUEL TANK REMOVAL/INSTALLATION

⚠WARNING

Gasoline is highly flammable and explosive. You can be burned or seriously injured when handling fuel.
- Keep heat, sparks, and flame away.
- Handle fuel only outdoors.
- Wipe up spills immediately.

Remove the fan cover (page 5-2).

Place a suitable container under the carburetor.

Turn the fuel valve lever [1] to the ON position.

Loosen the drain screw [2] and drain the fuel.

NOTE:
- Route the fuel tube properly (page 2-8).

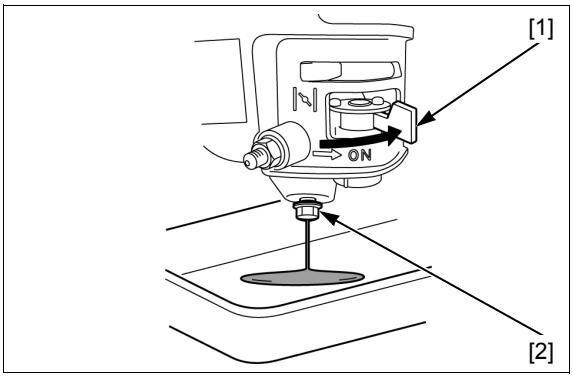

FUEL FILLER CAP

FUEL FILLER CAP PACKING

CHECK:
Check for deterioration or cracks.

FUEL TANK

NEW O-RING

FUEL TANK JOINT

2 N·m (0.2 kgf·m, 1.5 lbf·ft)
CHECK:
Check the screen of the fuel tank joint for clogs or damage.

FUEL TUBE

CHECK:
Check for deterioration, cracks or clogs.

NUT (6 mm) (2)

10 N·m (1.0 kgf·m, 7 lbf·ft)

GP160H: BOLT (6 x 29 mm)
GP200H: BOLT (6 x 34 mm)

10 N·m (1.0 kgf·m, 7 lbf·ft)

AIR CLEANER REMOVAL/INSTALLATION

NOTE:

- Route the breather tube properly (page 2-8).

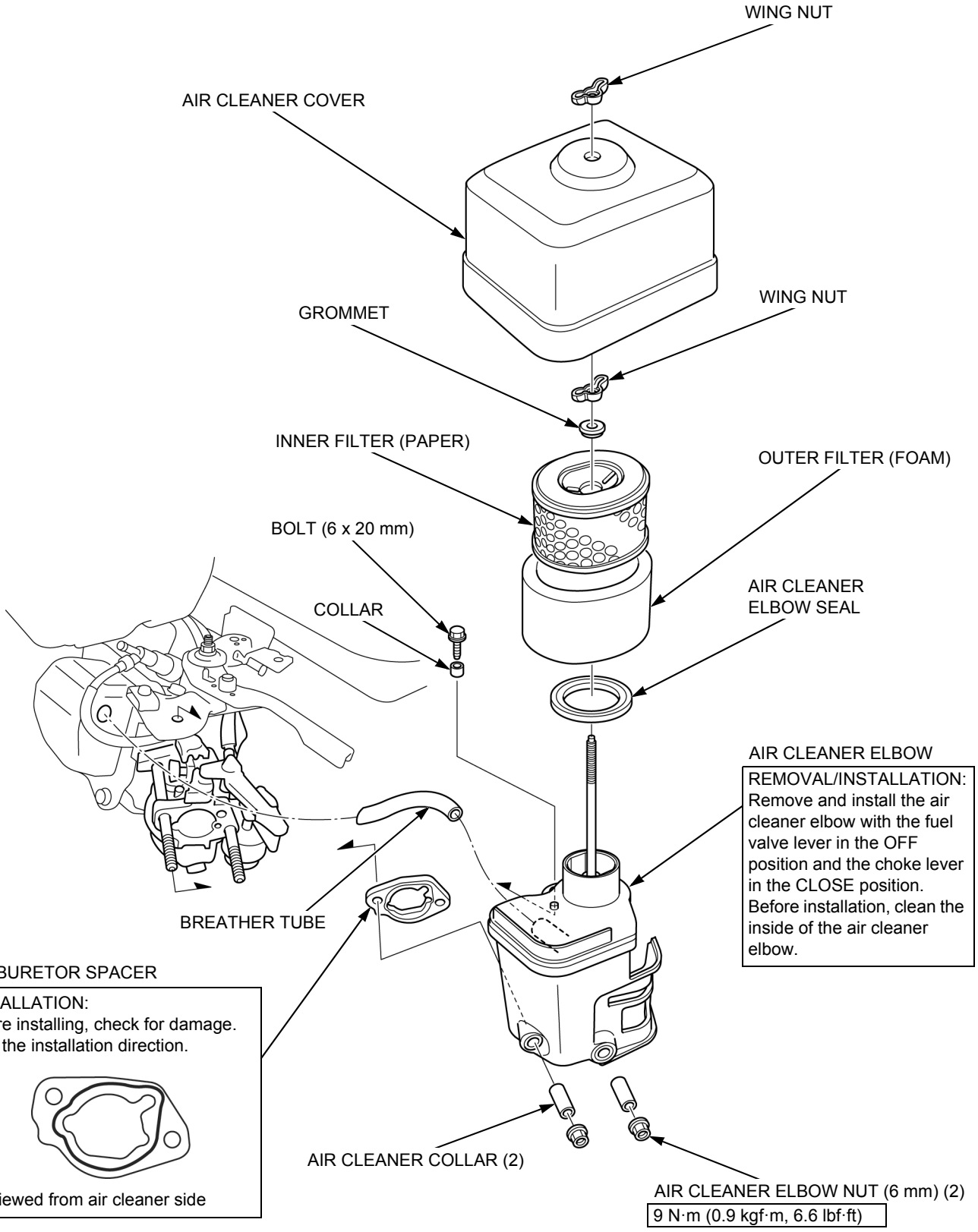

CARBURETOR REMOVAL/INSTALLATION

⚠ WARNING

Gasoline is highly flammable and explosive. You can be burned or seriously injured when handling fuel.
- Keep heat, sparks, and flame away.
- Handle fuel only outdoors.
- Wipe up spills immediately.

Remove the air cleaner (page 6-4).

Set a commercially available tube clamp to the fuel tube.

Drain the fuel completely (page 6-3).

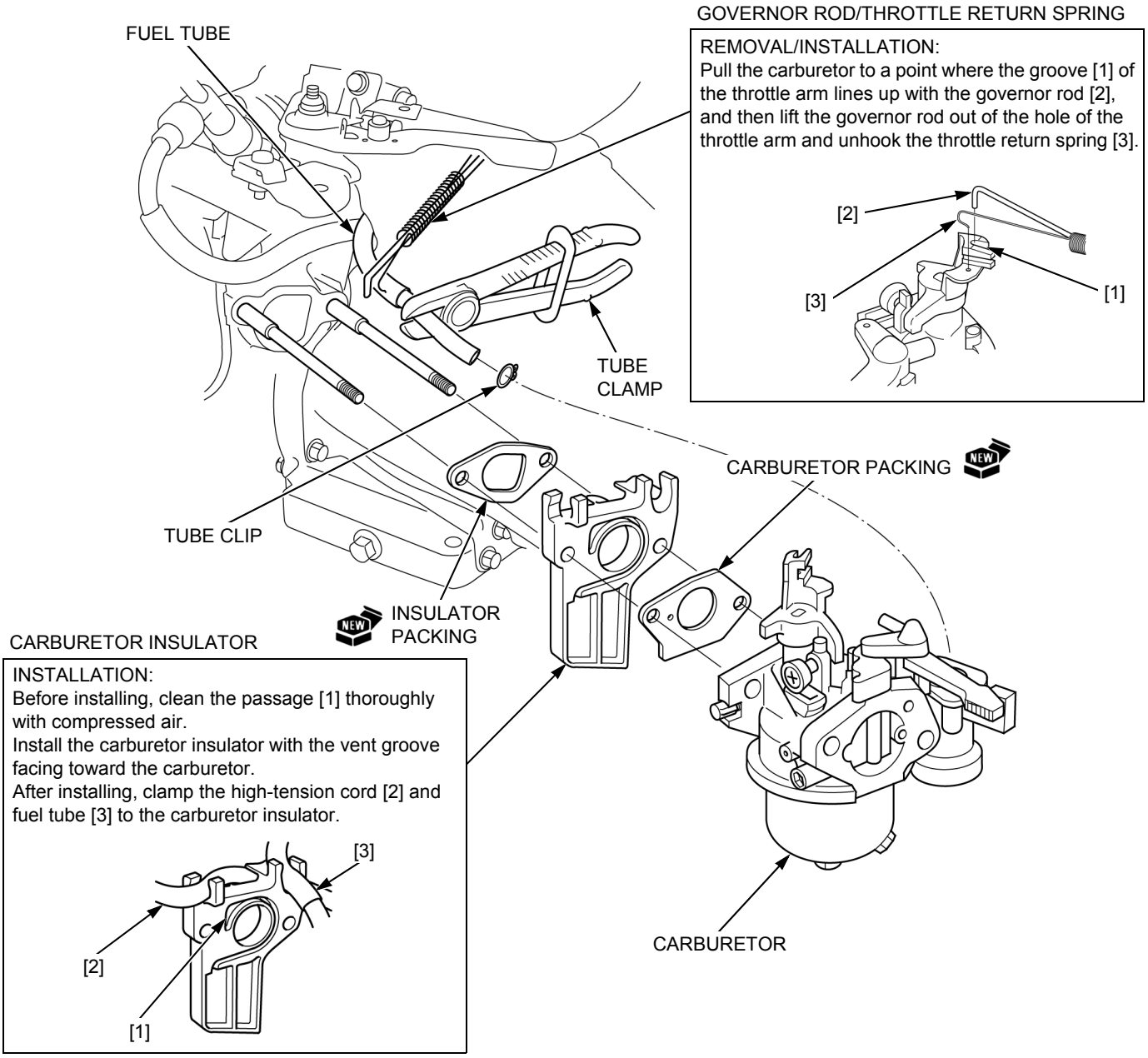

CARBURETOR DISASSEMBLY/ASSEMBLY

⚠ WARNING

Gasoline is highly flammable and explosive. You can be burned or seriously injured when handling fuel.
- Keep heat, sparks, and flame away.
- Handle fuel only outdoors.
- Wipe up spills immediately.

⚠ CAUTION

To prevent serious eye injury, always wear safety goggles or other eye protection when using compressed air.

Remove the carburetor (page 6-5).

Before disassembly, clean the outside of the carburetor.

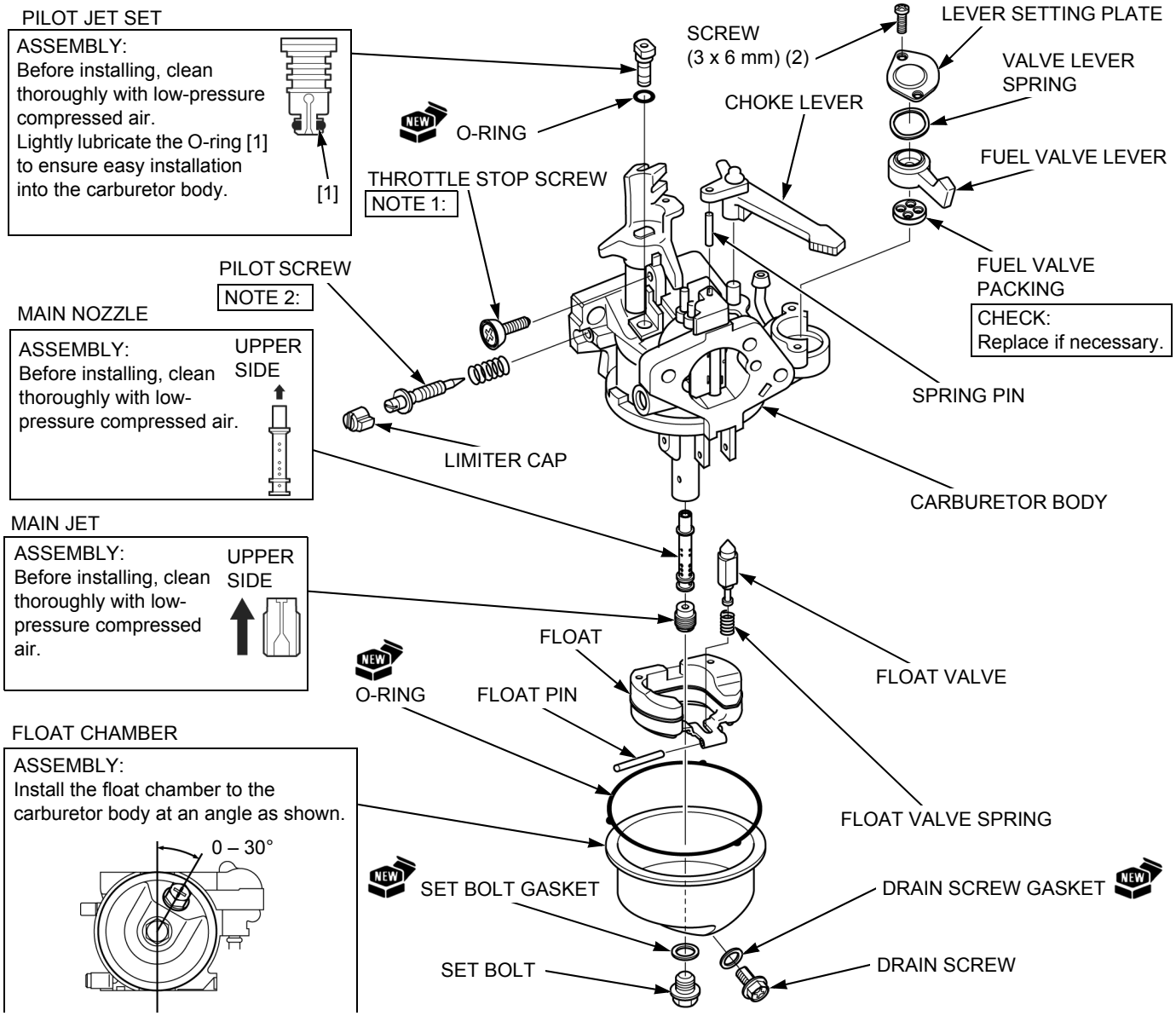

NOTE 1	IDLE SPEED ADJUSTMENT	page 3-6
NOTE 2	PILOT SCREW REPLACEMENT/INSTALLATION	page 6-8

CARBURETOR BODY CLEANING

⚠ CAUTION

To prevent serious eye injury, always wear safety goggles or other eye protection when using compressed air.

NOTICE

- *Some commercially available chemical cleaners are very caustic. These cleaners may damage plastic parts such as the O-ring, the float and the float valve seat of the carburetor. Check the container for instructions. If you are in doubt, do not use these products to clean Honda carburetors.*
- *High air pressure may damage the carburetor body. Use low air pressure (206 kPa (2.11 kgf/cm^2, 30 psi) or less) when cleaning passages and ports.*

Clean the carburetor body with non-flammable solvent.

Clean thoroughly the following passages and ports with low-pressure compressed air.

– Pilot screw hole [1]
– Pilot jet hole [2]
– Pilot air jet [3]
– Main air jet [4]
– Transition ports [5]
– Pilot outlet [6]
– Main nozzle holder [7]
– External vent port [8]
– Internal vent port [9]

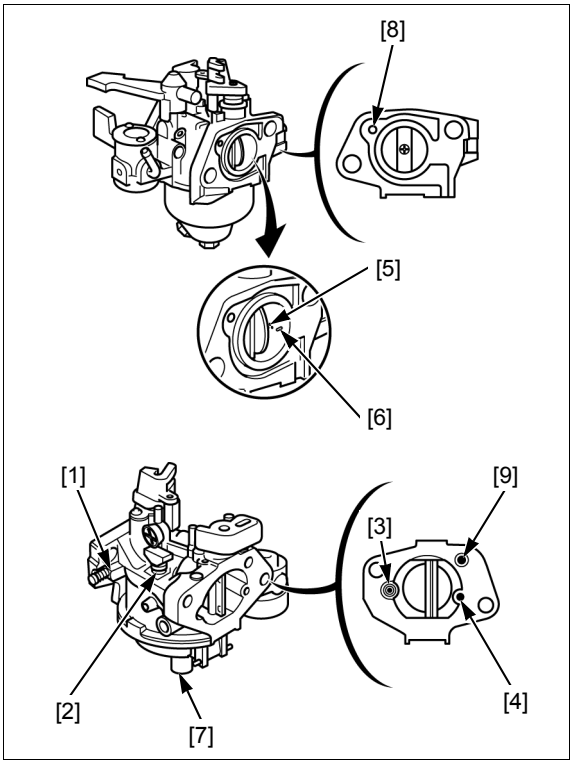

CARBURETOR INSPECTION

FLOAT LEVEL HEIGHT

Place the carburetor in the position as shown. Measure the distance between the float top and carburetor body when the float just contacts the seat without compressing the valve spring.

TOOL:
Float level gauge [1] 07401-0010000

FLOAT HEIGHT: 13.7 mm (0.54 in)

If the measured float height is out of specification, check the float valve and the float valve spring (page 6-8).

If the float valve and float valve spring are normal, replace the float (page 6-6).

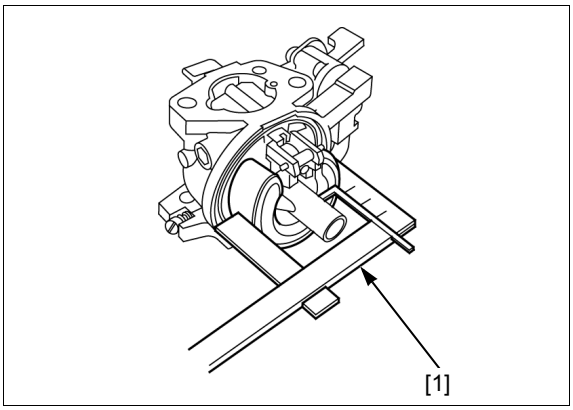

FLOAT VALVE

Check the float valve and its seat [1] for wear or contamination.

Check the valve seat [2] for clogs.

Before installation, check for wear or a weak float valve spring [3].

Check the operation of the float valve.

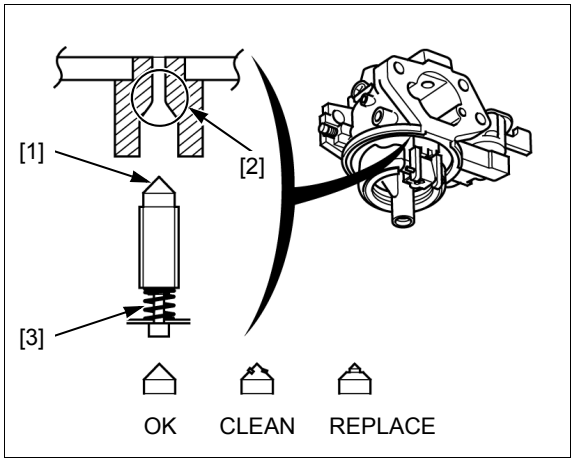

PILOT SCREW REPLACEMENT

Leave the pilot screw [1] and limiter cap [2] in place during carburetor cleaning. Remove only if necessary for carburetor repair.

Removal of the limiter cap requires breaking the pilot screw. A new pilot screw and limiter cap must be installed.

When the limiter cap has been broken off, remove the broken pilot screw.

Place the spring on the replacement pilot screw, and install it on the carburetor.

Turn the pilot screw in until it is lightly seated and then turn the screw out the required number of turns.

Model	Carburetor identification Number [3] + [4]	Pilot screw opening
GP160H	BEA2F A	2-3/8 turns out
GP200H	BE69G A	2-1/2 turns out

Refer to the table above for carburetor pilot screw initial opening setting.

Apply LOCTITE® 638 or equivalent to the inside of the limiter cap and then install the cap so the stop prevents the pilot screw from being turned counterclockwise.

Be careful to avoid turning the pilot screw while installing the limiter cap. The pilot screw must stay at its required setting.

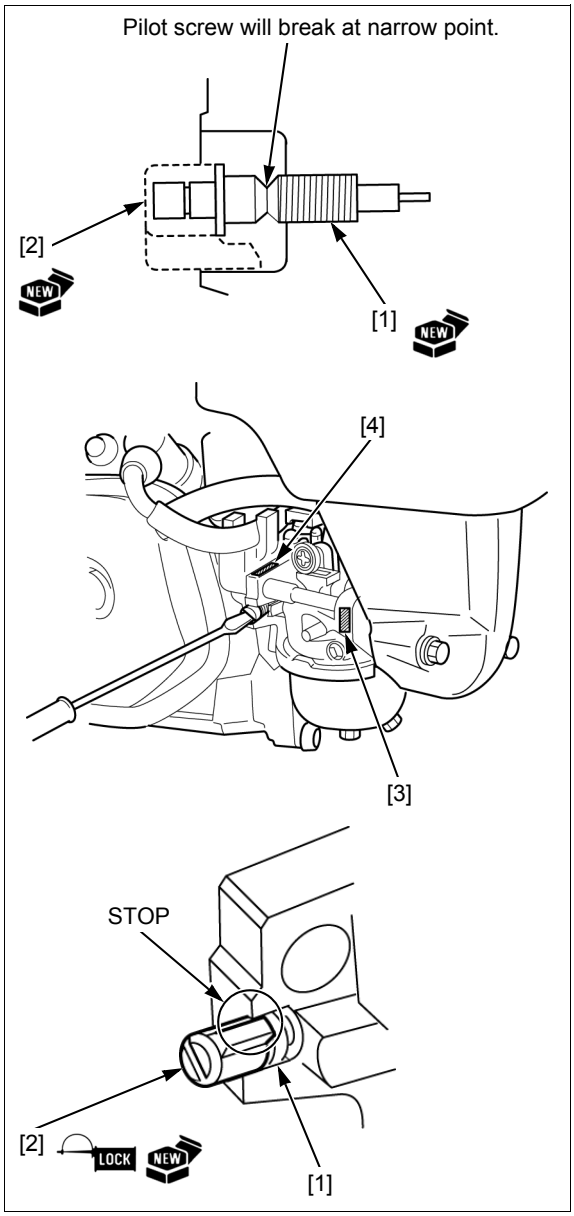

CHOKE REPLACEMENT

Remove the carburetor (page 6-5).

Pull out the choke valve plate [1].

Remove the choke shaft [2] and install a new choke shaft.

Insert a new choke valve plate into the slit [3] of the choke shaft.

Be sure the choke shaft is in the position between the projections [4] of the choke valve plate.

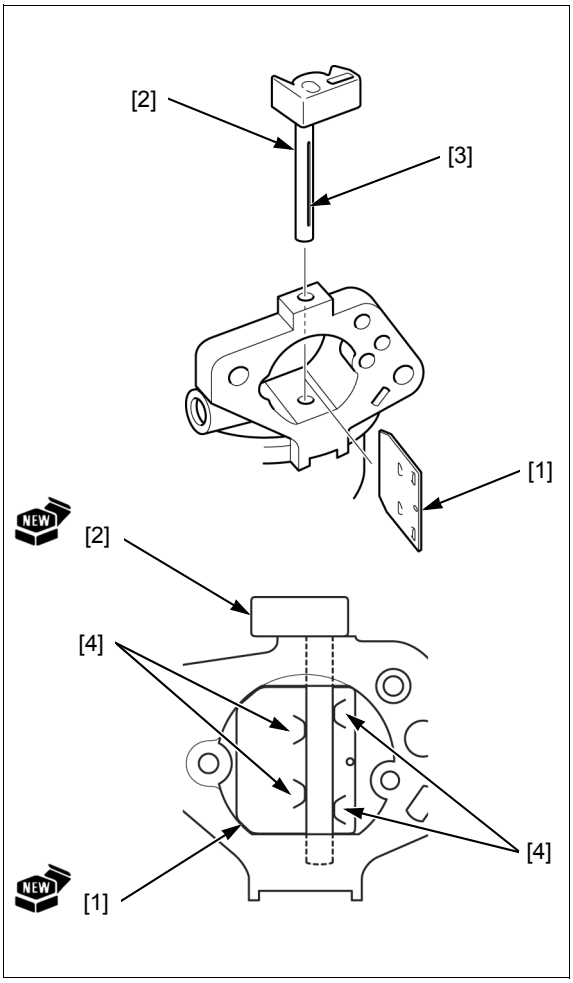

CARBURETOR STUD BOLT REPLACEMENT

Remove the carburetor (page 6-5).

Thread two nuts onto the carburetor stud bolts [1] and tighten them together, then use a wrench to turn the stud bolt out.

Install and tighten new stud bolts until they are fully seated.

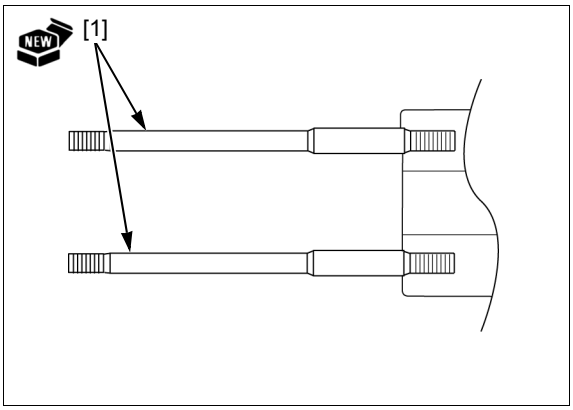

MEMO

7. GOVERNOR SYSTEM

GOVERNOR MECHANISM ····· 7-2

GOVERNOR ARM/CONTROL BASE REMOVAL/INSTALLATION ····· 7-3

CONTROL BASE DISASSEMBLY/ASSEMBLY ····· 7-4

GOVERNOR ADJUSTMENT ····· 7-5

GOVERNOR DISASSEMBLY/ASSEMBLY ····· 7-6

MAXIMUM SPEED ADJUSTMENT ····· 7-7

GOVERNOR MECHANISM

FUNCTION OF THE COMPONENTS

STARTING

While stopping the engine, the throttle valve [1] is remained in slightly returned position from full opening condition by the throttle return spring [2].

After starting the engine, the governor weights [3] are opened by centrifugal force according to the rising of the engine revolution, to close the throttle valve to the idling condition, through the governor slider [4], governor arm shaft [5], governor arm [6] and governor rod [7].

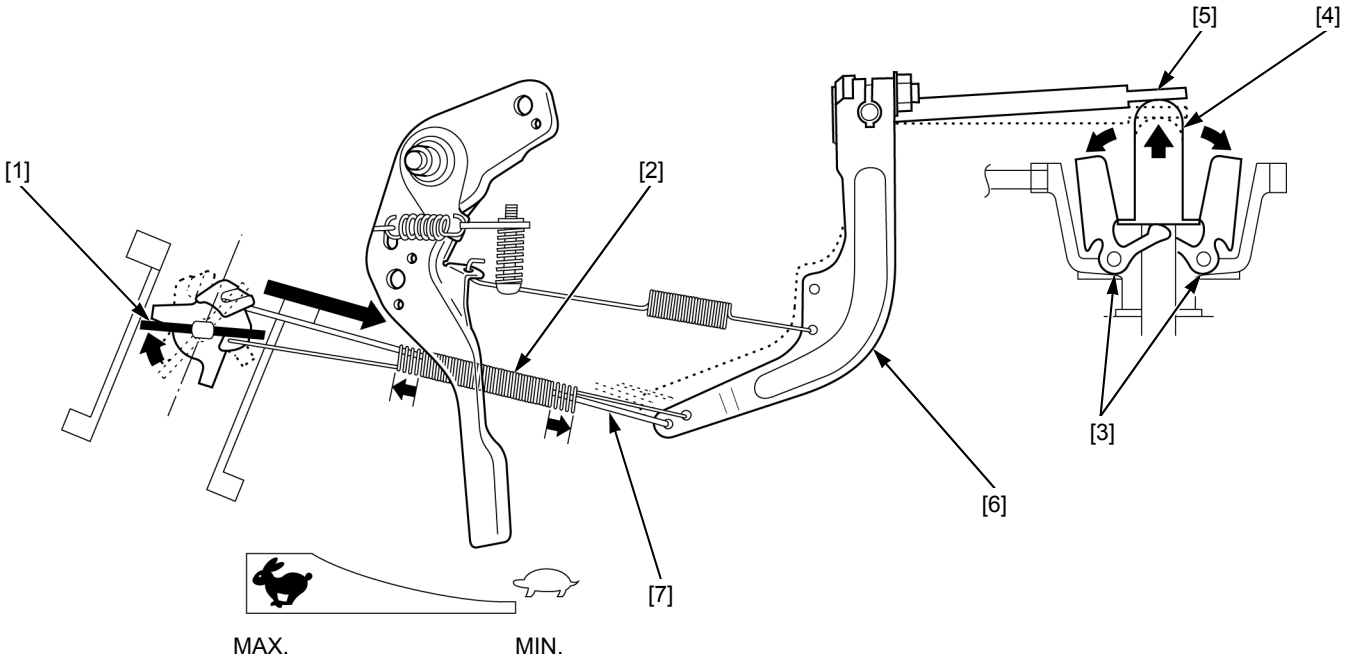

OPERATION

If the engine revolution is varied from steady condition to unstable condition due to the change in the load, the throttle valve [1] is opened or closed to maintain counterbalanced position between the governor weights [2] and governor spring [3] to maintain the proper revolution by the governor mechanism.

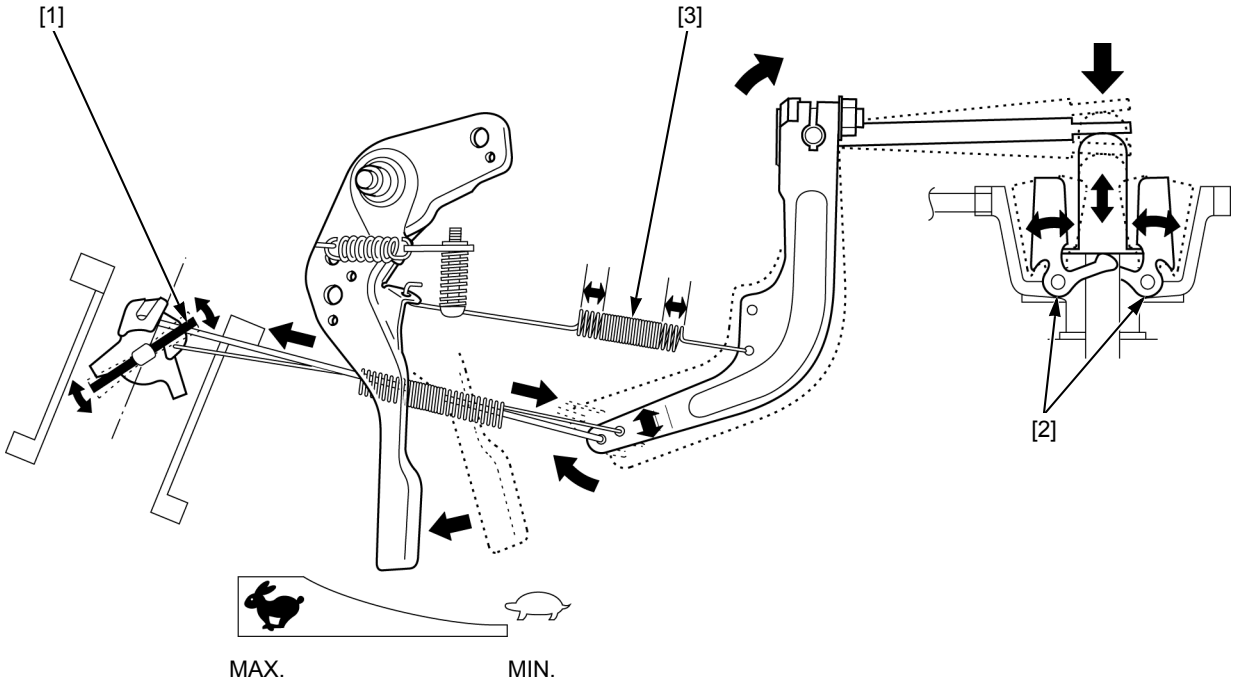

GOVERNOR ARM/CONTROL BASE REMOVAL/INSTALLATION

Remove the following:

– Air cleaner (page 6-4)
– Fuel tank (page 6-3)

NOTE:

- After installation, adjust the following:
  – Governor (page 7-5)
  – Idle speed (page 3-6)
  – Maximum speed (page 7-7)

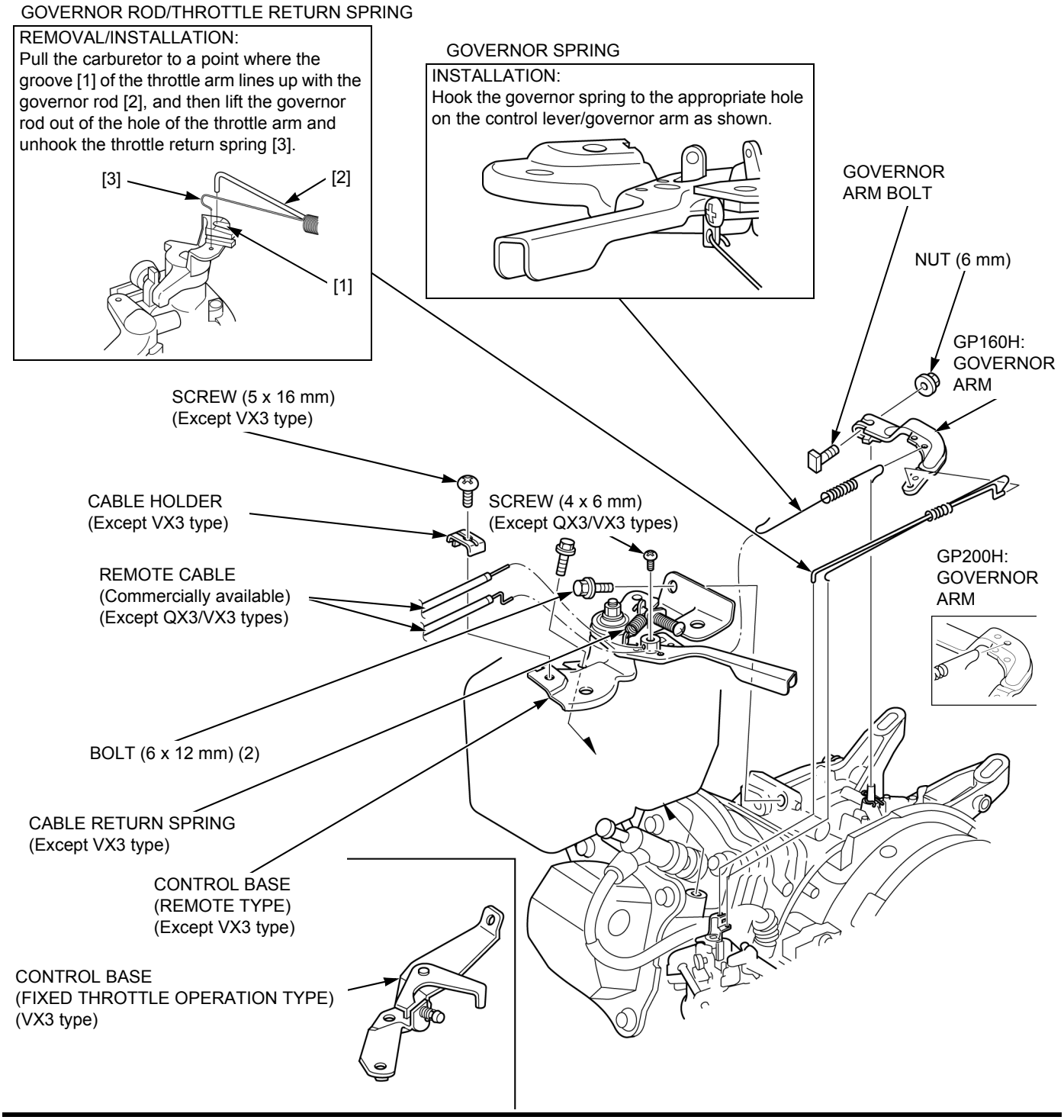

CONTROL BASE DISASSEMBLY/ASSEMBLY

REMOTE TYPE

Remove the control base (page 7-3).

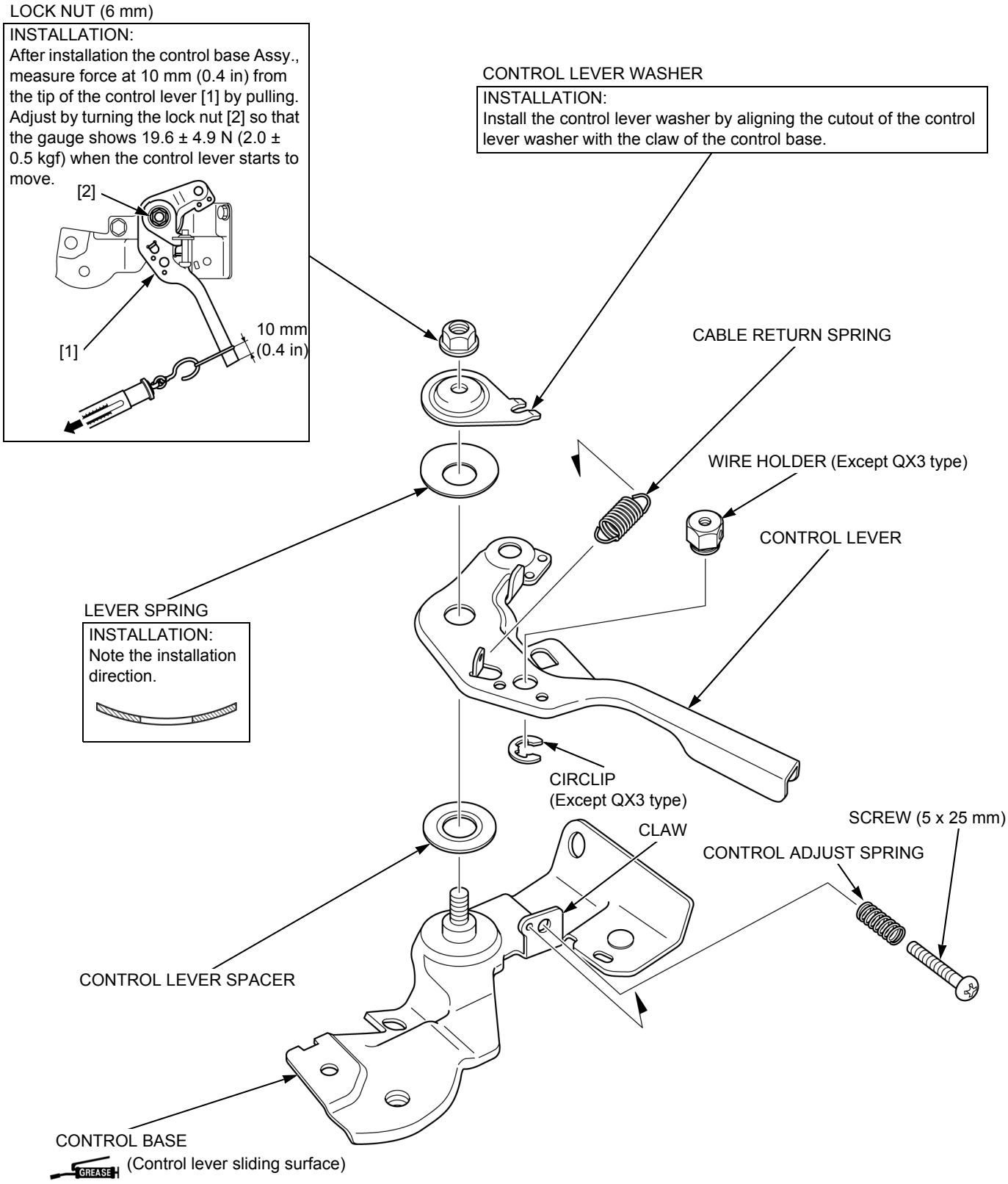

FIXED THROTTLE OPERATION TYPE

Remove the control base.(page 7-3).

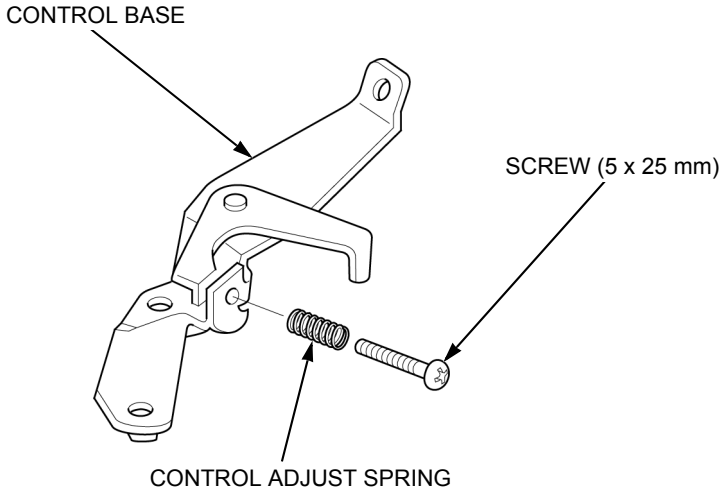

GOVERNOR ADJUSTMENT

Loosen the nut (6 mm) [1] of the governor arm.

Turn the governor arm [2] clockwise to fully open the carburetor throttle valve [3].

Rotate the governor arm shaft [4] as far as it will go in the same direction the governor arm moved to open the throttle valve.

Make sure the carburetor throttle valve is fully open.

Tighten the nut (6 mm) securely.

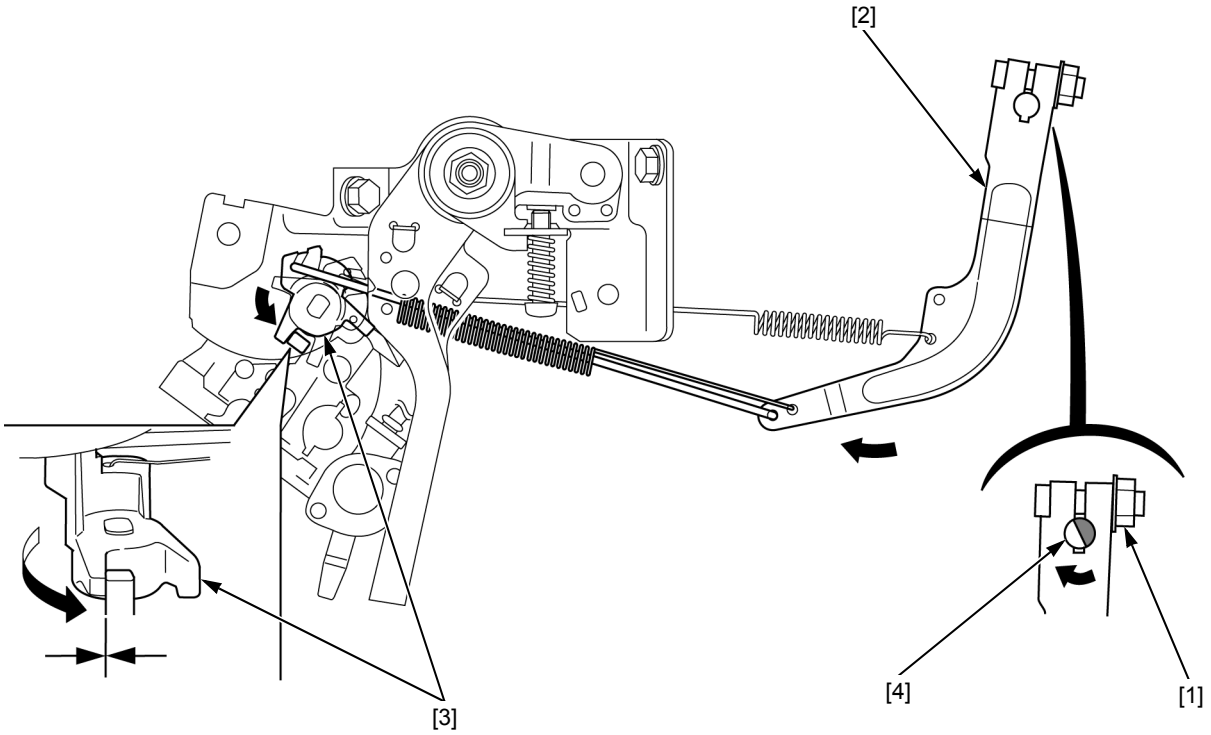

GOVERNOR DISASSEMBLY/ASSEMBLY

Remove the crankshaft (page 13-4).

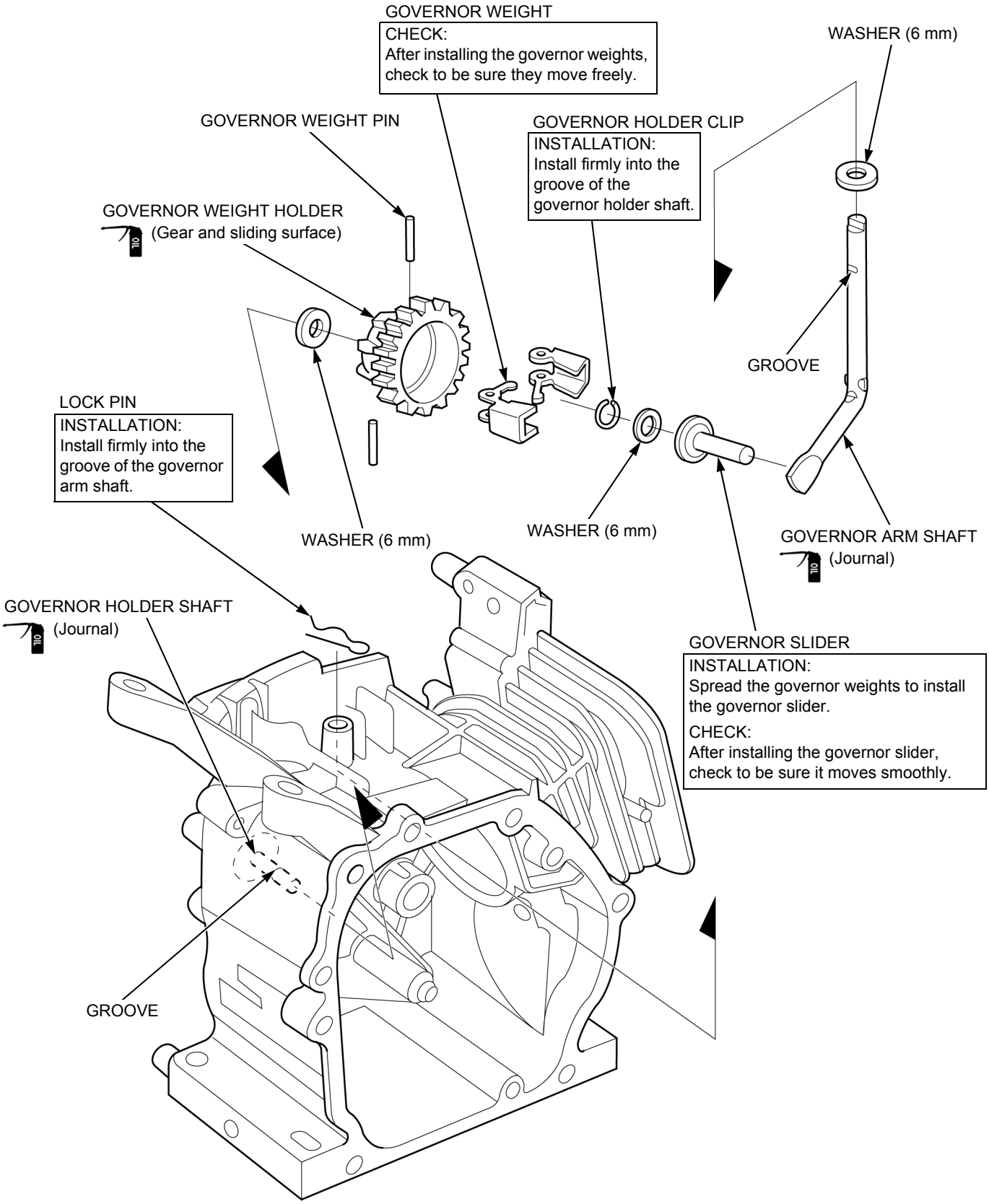

MAXIMUM SPEED ADJUSTMENT

Use a tachometer with graduations of 50 min^{-1} (rpm) or smaller that will accurately indicate 50 min^{-1} (rpm) changes.

Start the engine and allow it to warm up to normal operating temperature.

Move the control lever [1] to run the engine at the specified maximum speed, and hold the control lever.

Make sure the carburetor throttle valve [2] is fully open.

Turn the screw [3] of the control base to obtain the specified maximum speed.

MAXIMUM SPEED:
GP160H: 3,900 ± 100 min^{-1} (rpm)
GP200H: 3,850 ± 150 min^{-1} (rpm)

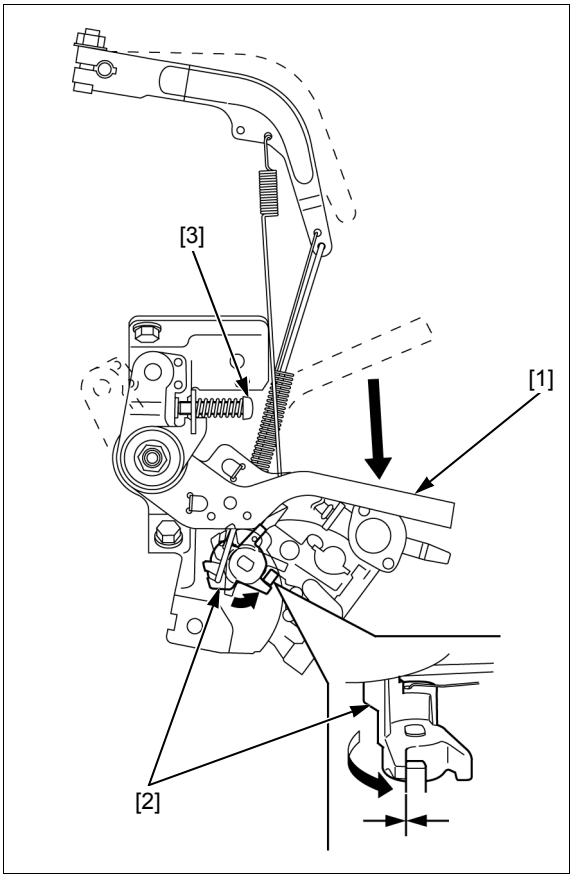

MEMO

8. IGNITION SYSTEM

IGNITION SYSTEM TROUBLESHOOTING ····· 8-2

IGNITION COIL REMOVAL/INSTALLATION ····· 8-3

COOLING FAN/FLYWHEEL REMOVAL/INSTALLATION ····· 8-4

IGNITION COIL AIR GAP CHECK/ADJUSTMENT ····· 8-6

SPARK TEST ····· 8-6

SPARK PLUG CAP INSPECTION ····· 8-7

IGNITION COIL INSPECTION ····· 8-7

IGNITION SYSTEM TROUBLESHOOTING

NO OR WEAK SPARK AT SPARK PLUG

Check the following before troubleshooting:

- Loose connectors
- Spark plug (page 3-5)
- Engine oil level (page 3-3)

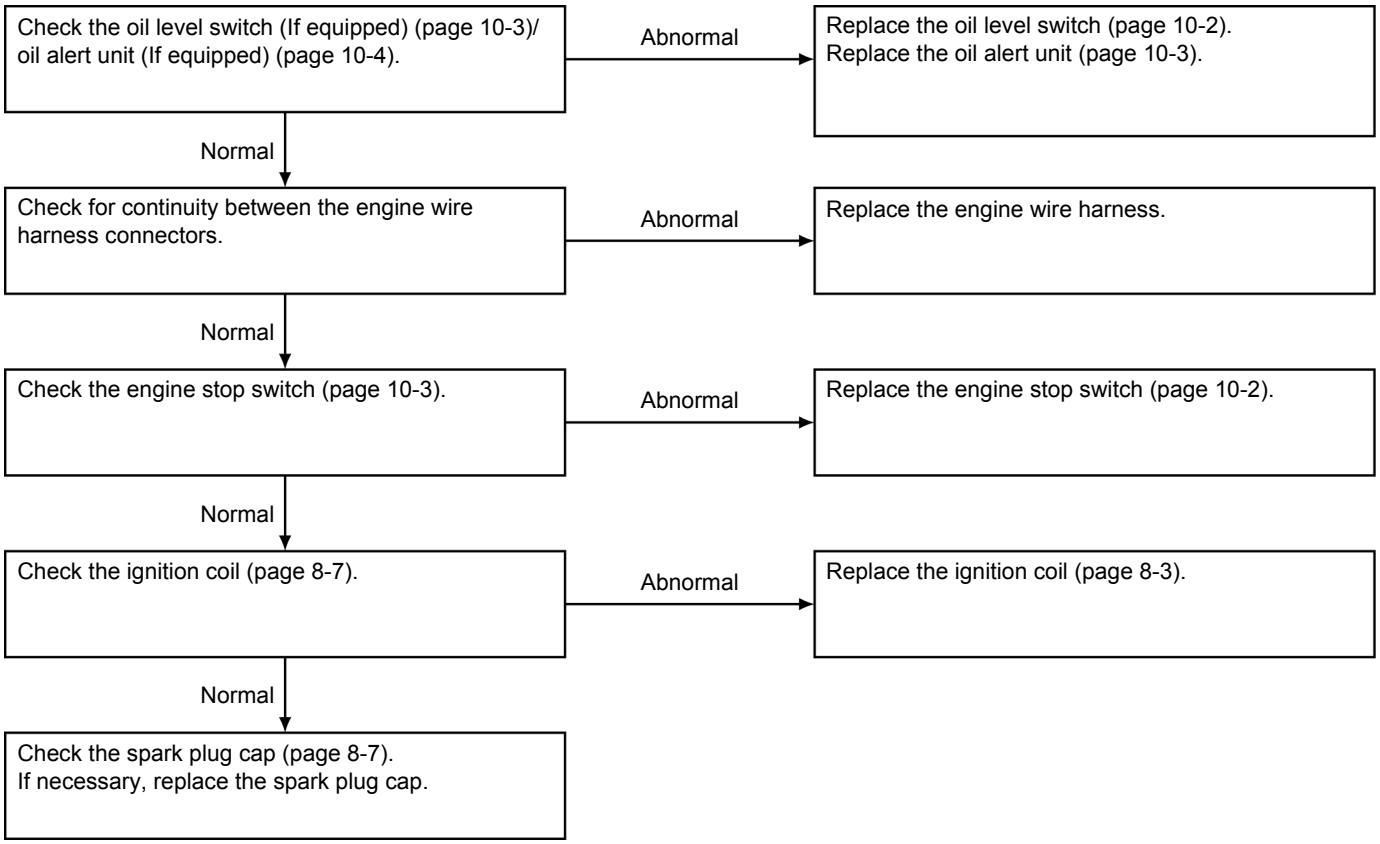

IGNITION COIL REMOVAL/INSTALLATION

Remove the following:

– Fan cover (page 5-2)
– Fuel tank (page 6-3)
– Carburetor (page 6-5)

NOTE:

- Route the engine wire harness and high-tension code properly (page 2-8).
- After installation, check the ignition coil air gap (page 8-6).

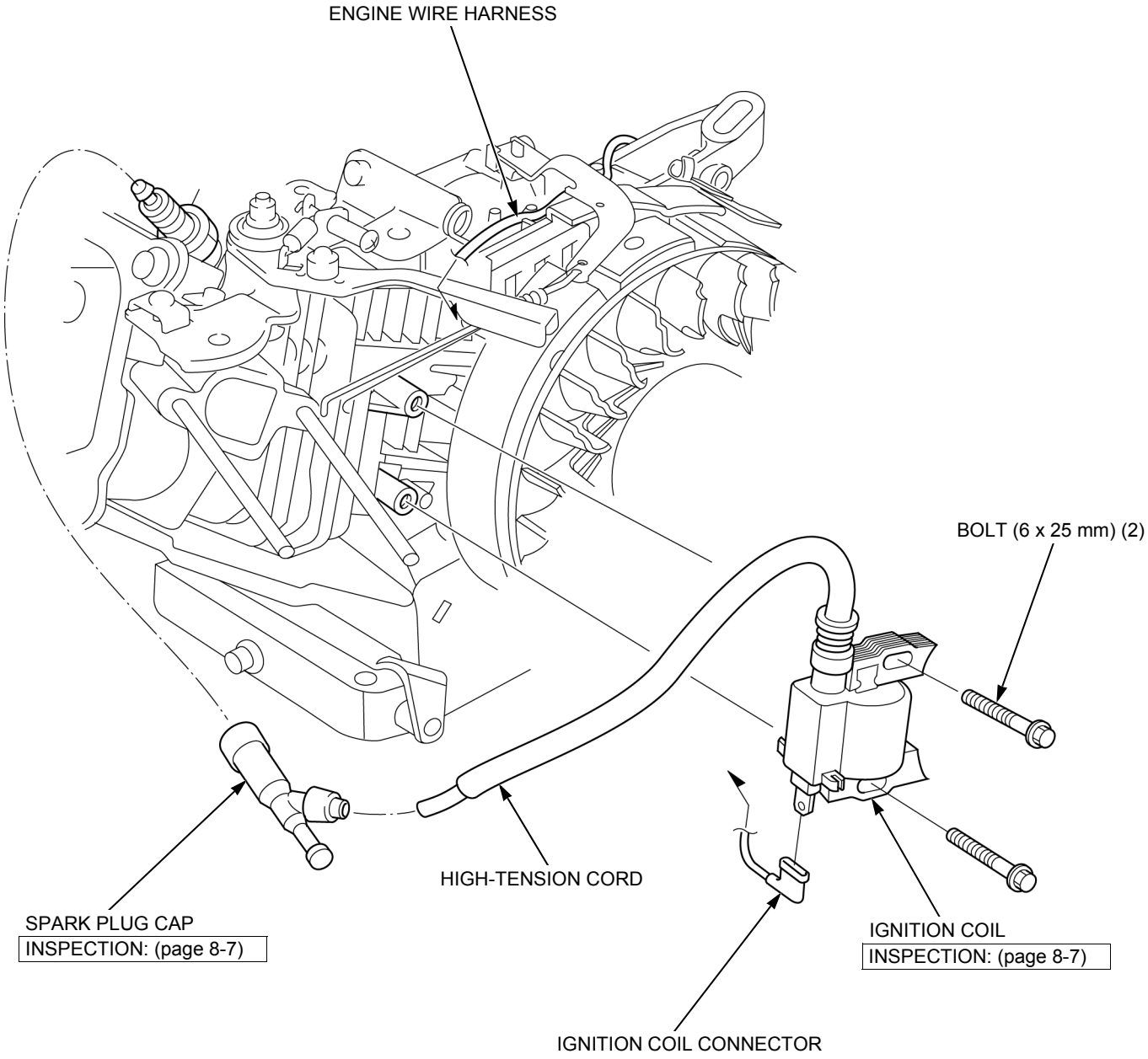

COOLING FAN/FLYWHEEL REMOVAL/INSTALLATION

REMOVAL

Remove the ignition coil (page 8-3).

WOODRUFF KEY

SIDE PLATE

MAGNET PART

BOLT (6 x 22 mm)

STARTER PULLEY

COOLING FAN

NUT (14 mm)
(Threads and seating surface)
75 N·m (7.5 kgf·m, 55 lbf·ft)

FLYWHEEL

REMOVAL:
Use the commercially available tool [1] to remove the flywheel.

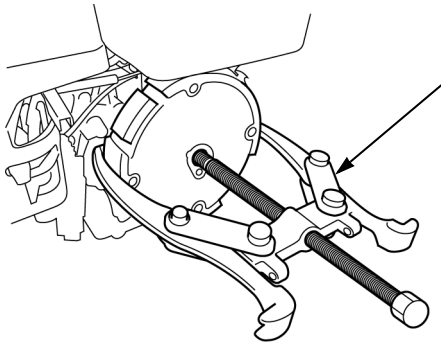

REMOVAL:
Hold the flywheel [1] with a commercially available strap wrench [2], being careful not to damage the magnet part.
Remove the flywheel nut (14 mm) [3].

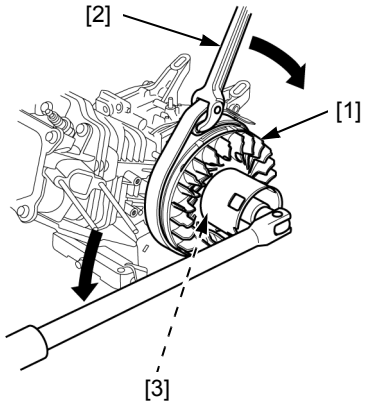

INSTALLATION

NOTICE

- *Clean the tapered parts [1] of dirt, oil, grease, and other foreign material before installation.*
- *Be sure there are no metal parts or other foreign material on the magnet part [2] of the flywheel.*

Set the woodruff key [3] in the key groove [4] of the crankshaft securely.

Set the flywheel [5] by aligning the key slot [6] with the woodruff key on the crankshaft.

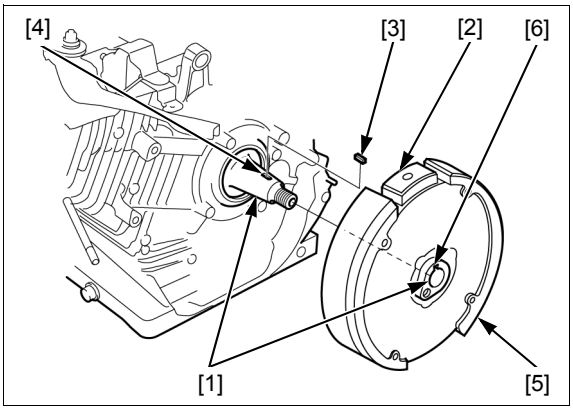

Attach the cooling fan [1] to the flywheel [2] by aligning the four projections of the cooling fan with the holes of the flywheel.

Attach the starter pulley [3] by aligning the following:

– Holes of the pulley and tabs of the cooling fan
– Tab of the pulley and hole of the flywheel

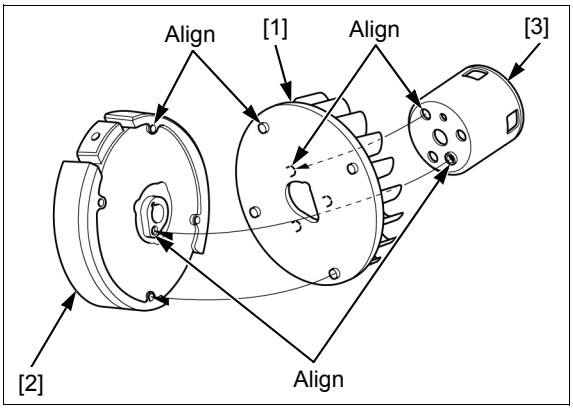

Apply a light coat of engine oil to the threads and the seating surface of the nut [1] and loosely tighten the nut.

Hold the flywheel [2] with a commercially available strap wrench [3], being careful not to damage the magnet part.

Tighten the flywheel nut to the specified torque.

TORQUE: 75 N·m (7.5 kgf·m, 55 lbf·ft)

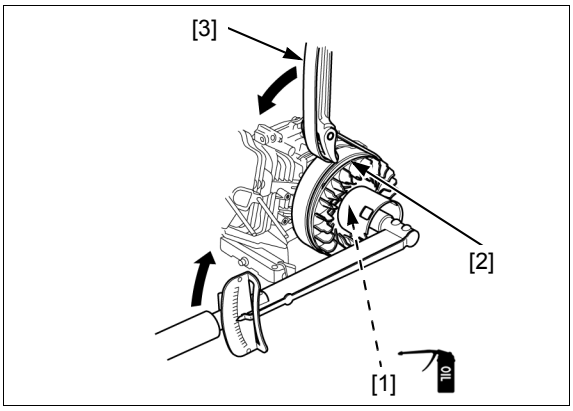

IGNITION COIL AIR GAP CHECK/ADJUSTMENT

Remove the fan cover (page 5-2).

Insert the feeler gauge [1] of proper thickness between the ignition coil [2] and the flywheel [3].

IGNITION COIL AIR GAP:
0.2 – 0.6 mm (0.01 – 0.02 in)

NOTICE

- *Avoid the magnet part of the flywheel when adjusting.*
- *Adjust the ignition coil air gap equally on both sides.*

If measured clearance is out of specification, adjust the air gap.

Loosen the two bolts (6 x 25 mm) [4].

Insert the feeler gauge of proper thickness between the ignition coil and flywheel.

Push the ignition coil firmly against the flywheel and tighten the ignition coil bolts securely.

Remove the feeler gauge.

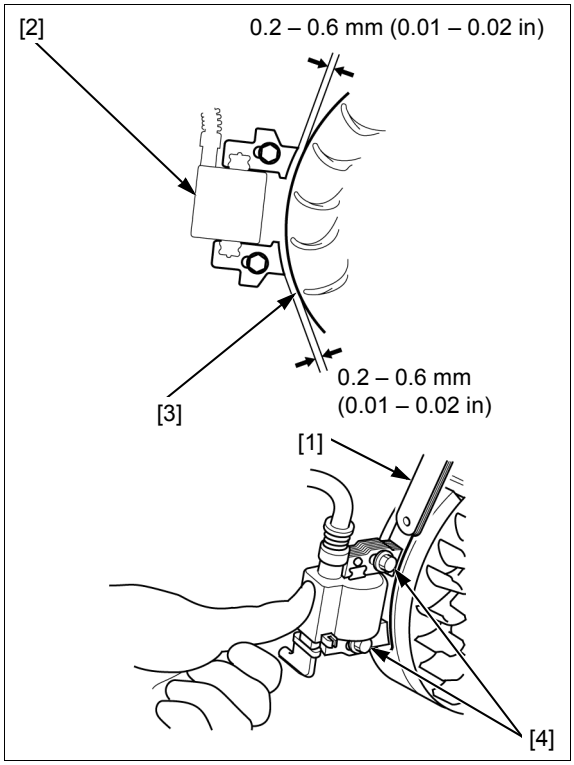

SPARK TEST

CAUTION

Never hold the high-tension cord with wet hands while performing this test.

Check for the following before conducting the spark test.

- Faulty spark plug
- Loose spark plug cap
- Water in the spark plug cap (leaking the ignition coil secondary voltage)
- Loose ignition coil connector

Disconnect the spark plug cap [1] from the spark plug [2].

Connect a known-good spark plug [3] to the spark plug cap and ground the spark plug to the cylinder head cover bolt [4].

Turn the engine stop switch to "ON" position.

Crank the engine by pulling the recoil starter and check whether sparks jump across the electrodes.

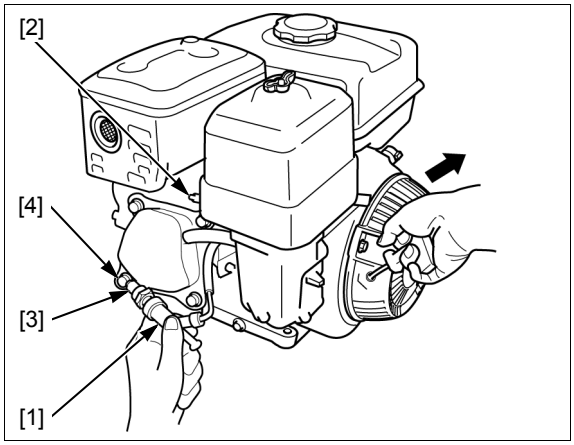

SPARK PLUG CAP INSPECTION

Measure the resistance of the spark plug cap [1] by attaching one ohmmeter probe to the terminal in the spark plug cap and the other to the high-tension cord terminal.

RESISTANCE: 7.5 – 12.5 kΩ (20°C/68°F)

If measured resistance is out of specification, replace the spark plug cap.

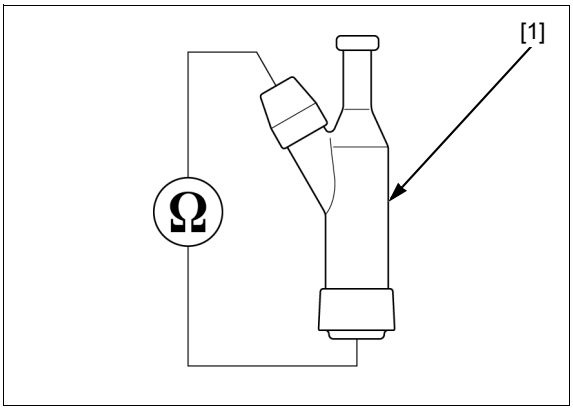

IGNITION COIL INSPECTION

Remove the fan cover (page 5-2).

PRIMARY SIDE

Disconnect the ignition coil connector [1].

Measure the resistance of the primary coil by attaching one ohmmeter probe to the terminal [2] and the other at the iron core [3].

RESISTANCE: 0.68 – 0.92 Ω

If measured resistance is out of specification, replace the ignition coil.

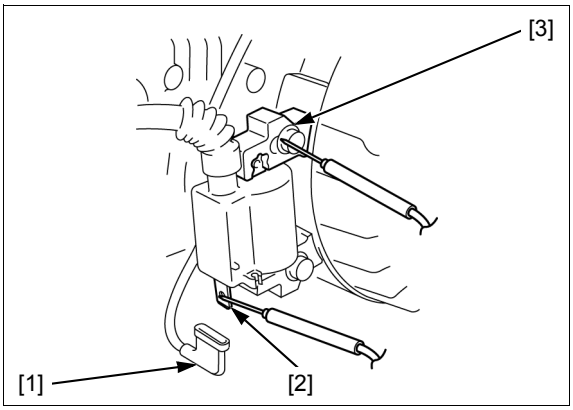

SECONDARY SIDE

Disconnect the spark plug cap from the high-tension cord [1].

Measure the resistance of the secondary coil by attaching one ohmmeter probe to the high-tension cord and the other at the iron core [2].

RESISTANCE: 5.6 – 8.4 kΩ

If measured resistance is out of specification, replace the ignition coil.

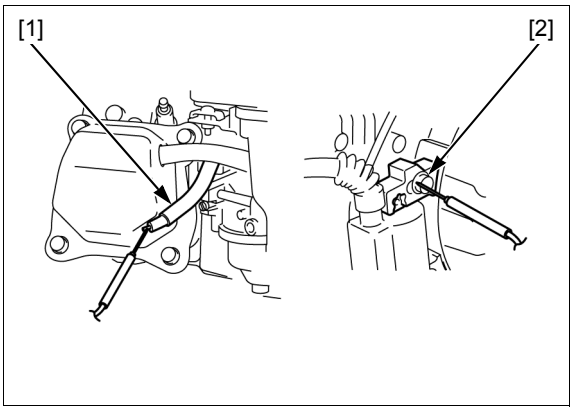

MEMO

9. STARTING SYSTEM

RECOIL STARTER
REMOVAL/INSTALLATION ····· 9-2

RECOIL STARTER
DISASSEMBLY/ASSEMBLY····· 9-3

RECOIL STARTER INSPECTION ····· 9-6

RECOIL STARTER REMOVAL/INSTALLATION

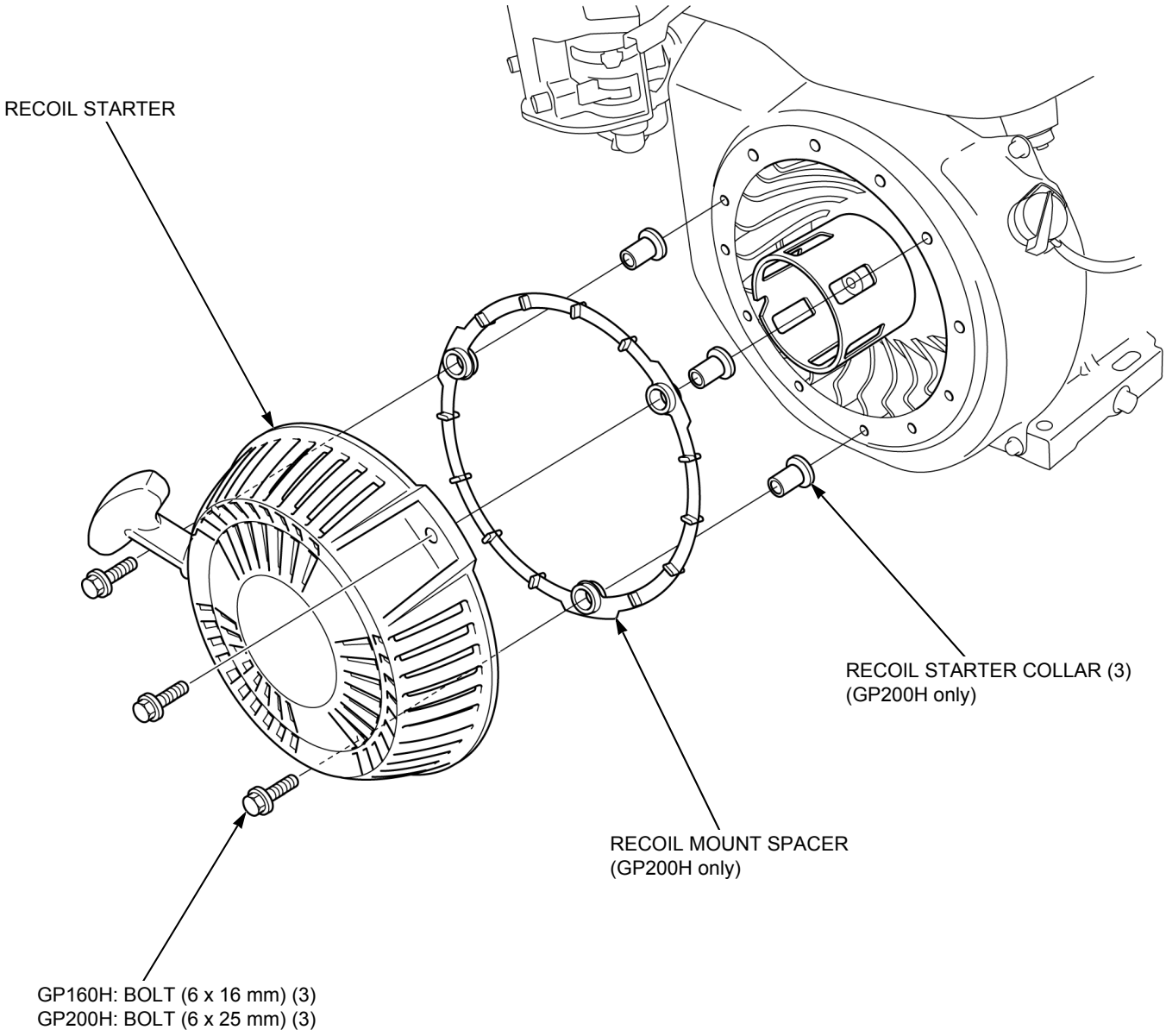

RECOIL STARTER DISASSEMBLY/ASSEMBLY

⚠ CAUTION

- Wear gloves and eye protection.
- During disassembly/assembly, take care not to allow the spring to come out.

DISASSEMBLY

Remove the recoil starter (page 9-2).

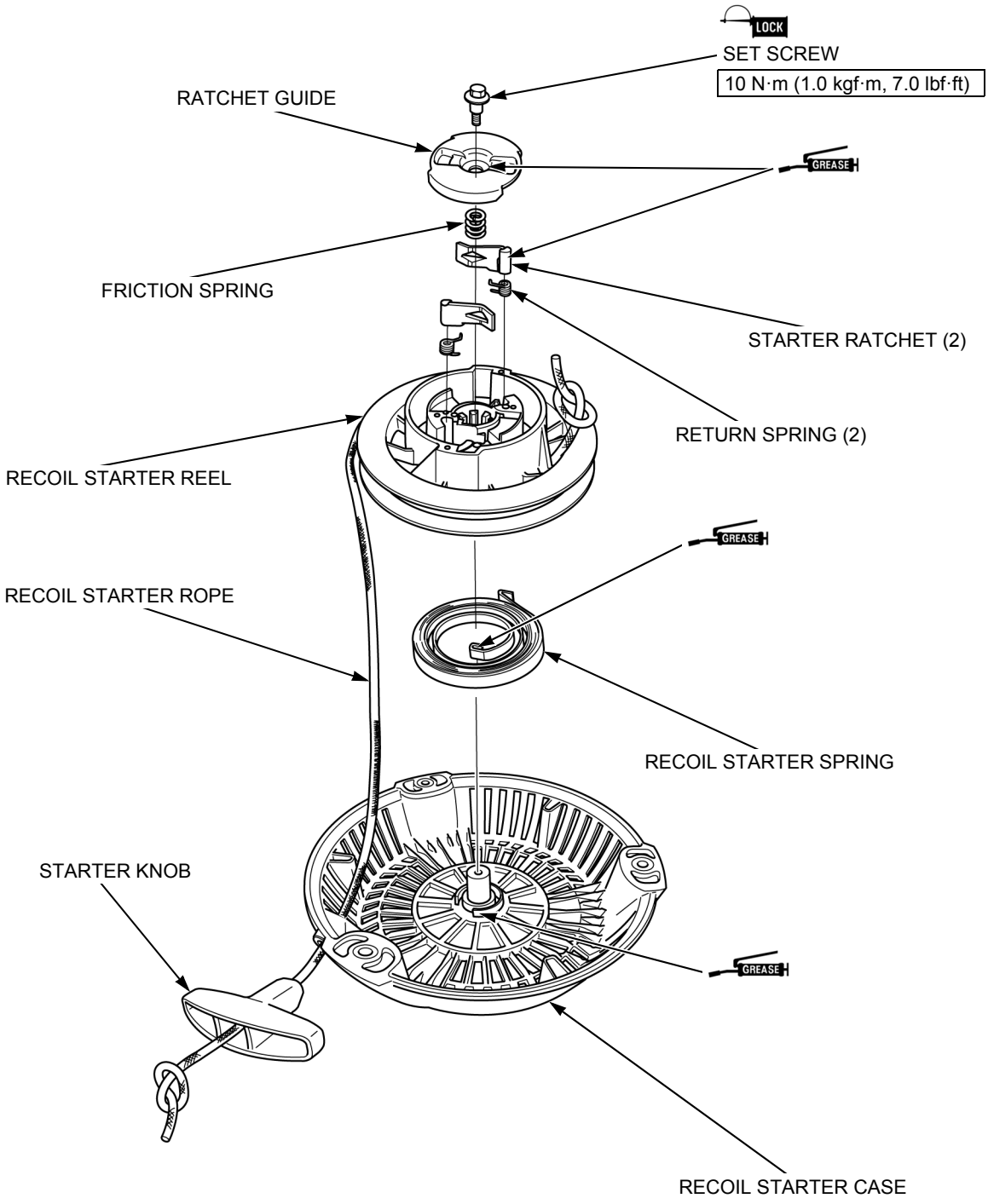

ASSEMBLY

⚠ CAUTION

- Wear gloves and eye protection.
- During reassembly, take care not to allow the spring to come out.

Pass the recoil starter rope [1] through the hole [2] of the recoil starter reel [3], and then tie the rope as shown.

NOTICE

Before installing the recoil starter rope, check for fray or wear.

Wind the recoil starter rope onto the recoil starter reel counterclockwise.

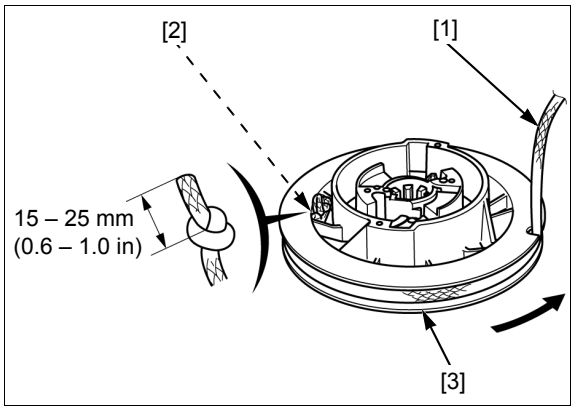

Hook the outer hook [1] of the recoil starter spring [2] to the groove [3] of the recoil starter reel [4], and then install the recoil starter spring by winding it.

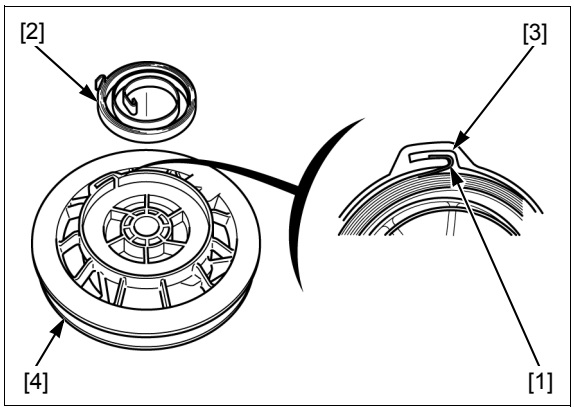

Apply grease to the cutout [1] of the recoil starter case [2].

Set the recoil starter reel [3] to the recoil starter case by aligning the inner hook [4] of the recoil starter spring with the cutout of the recoil starter case.

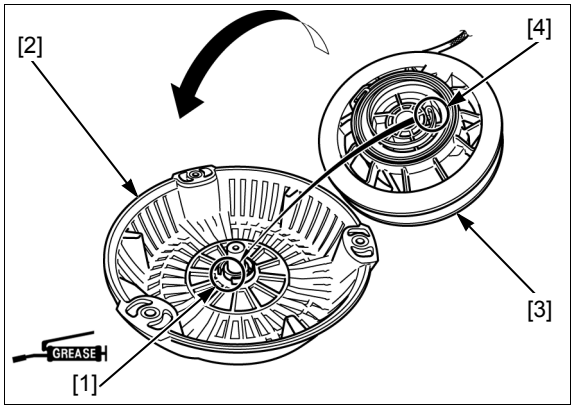

Apply grease to the two starter ratchets [1].

Install the two starter ratchets and the two return springs [2] to the recoil starter reel as shown.

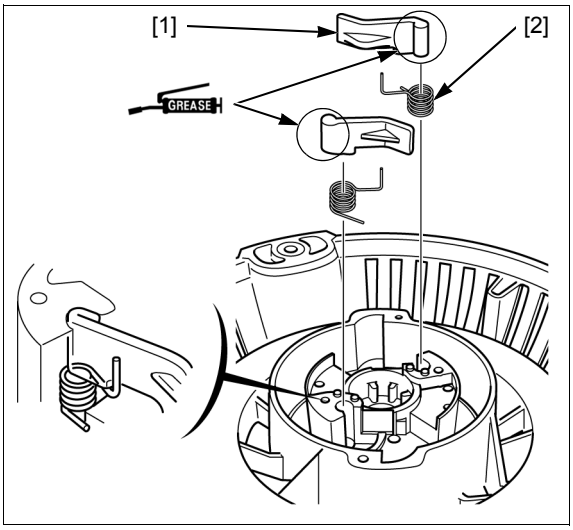

Apply grease to the inside of the ratchet guide [1].

Set the friction spring [2] and the ratchet guide to the recoil starter reel in the direction as shown.

Apply locking agent (ThreeBond® 2430 or equivalent) to the threads of the set screw [3].

Hold the ratchet guide and tighten the set screw to the specified torque.

TORQUE: 10 N·m (1.0 kgf·m, 7.0 lbf·ft)

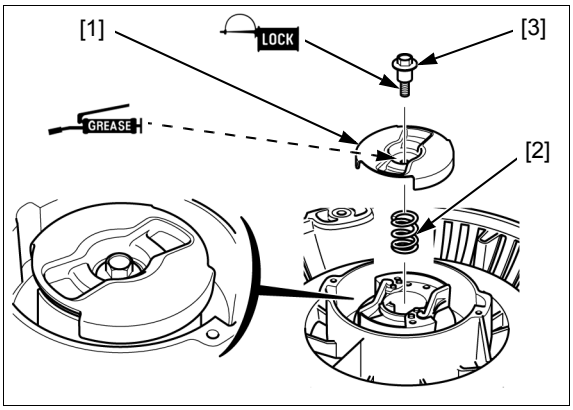

Turn the recoil starter reel [1] more than 2 turns counterclockwise to preload the recoil starter spring. Be sure to hold the recoil starter reel.

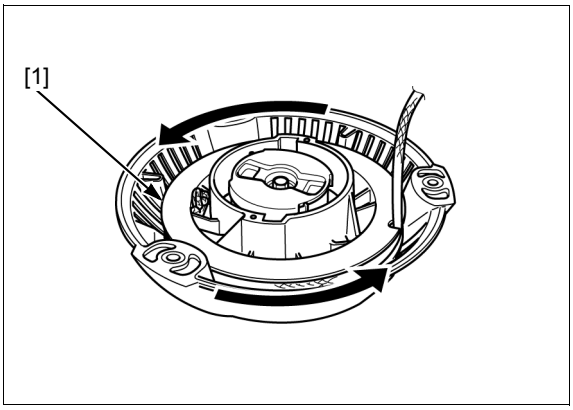

Pass the recoil starter rope through hole [1] of the recoil starter case, the starter knob [2], and then tie the rope as shown.

Check the recoil starter operation (page 9-6).

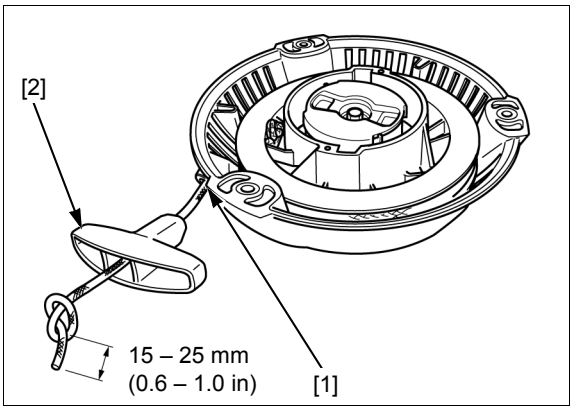

RECOIL STARTER INSPECTION

RECOIL STARTER OPERATION

Remove the recoil starter (page 9-2).

Pull the starter knob several times to inspect that the ratchets [1] are operated properly the ratchet ends come out from the ratchet guide [2].

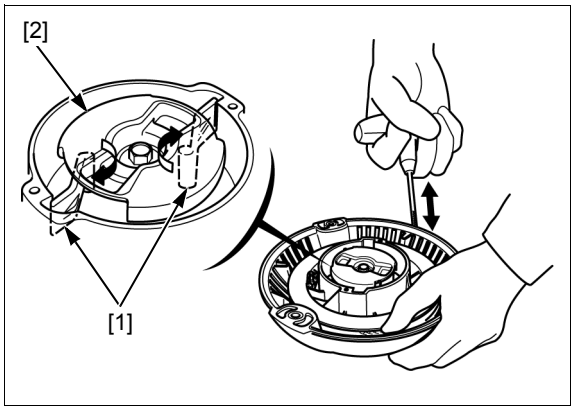

STARTER PULLEY

Remove the recoil starter (page 9-2).

Inspect the square holes [1] of the starter pulley [2] for deformation.

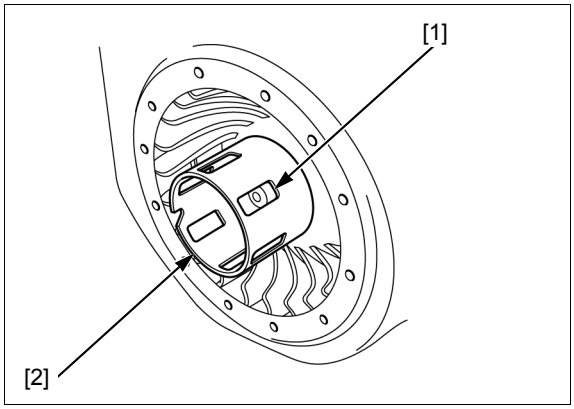

OIL LEVEL SWITCH REMOVAL/INSTALLATION ····· 10-2

ENGINE STOP SWITCH REMOVAL/INSTALLATION ····· 10-2

OIL ALERT UNIT REMOVAL/INSTALLATION ····· 10-3

OIL LEVEL SWITCH INSPECTION ····· 10-3

ENGINE STOP SWITCH INSPECTION ···· 10-3

OIL ALERT UNIT INSPECTION ····· 10-4

OIL LEVEL SWITCH REMOVAL/INSTALLATION

Disconnect the oil level switch connector.

Remove the camshaft (page 13-4).

NOTE:
- Take care not to drop the valve lifter.

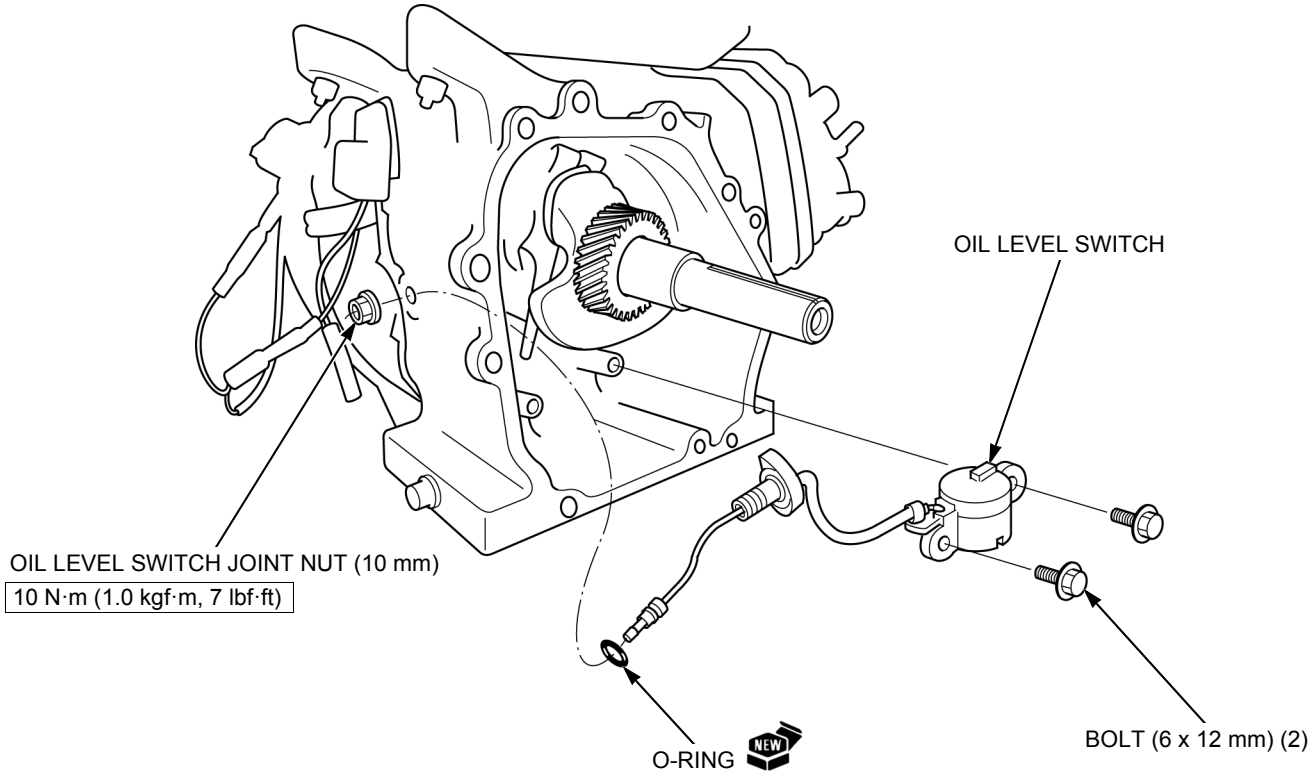

ENGINE STOP SWITCH REMOVAL/INSTALLATION

NOTE:
- Remove the engine stop switch only if necessary for engine stop switch or fan cover replacement.

Remove the fan cover (page 5-2).

Straighten the tab [1] of the engine stop switch [2] and remove the engine stop switch.

Install the engine stop switch to the fan cover aligning its groove with the boss of the fan cover.

Bend the tab until it is fully seated on the fan cover so the engine stop switch is held.

NOTE:
- The tab is used for ground terminal.

Install the fan cover (page 5-2).

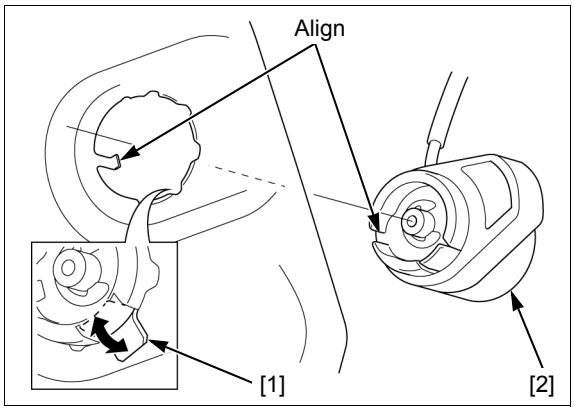

OIL ALERT UNIT REMOVAL/INSTALLATION

Disconnect the oil alert unit connectors [1].

Remove the bolt (6 x 12 mm) [2] and oil alert unit [3].

Install the oil alert unit and bolt.

Hold the oil alert unit against the boss [4] of the stay, and then tighten the bolt.

NOTE:
- Route the wire harness properly (page 2-8).

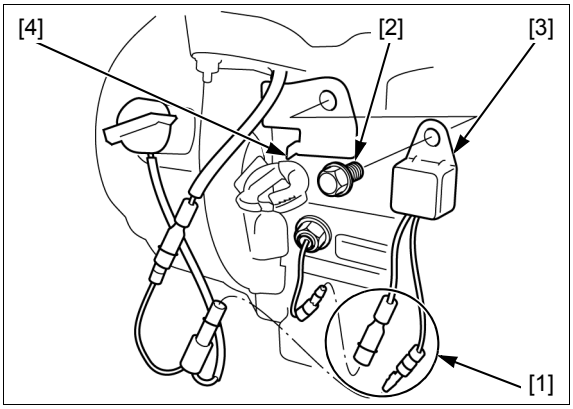

OIL LEVEL SWITCH INSPECTION

Check the oil level (page 3-3).

Disconnect the oil alert unit connector [1].

Check the continuity between the switch terminal and engine ground.
There should be no continuity when the engine is full of oil.

Drain the engine oil completely (page 3-3).

Check the continuity between the switch terminal and engine ground.
There should be continuity.

Check the continuity between the switch terminals while filling the engine with oil.
The ohmmeter reading should go from continuity to no continuity as the oil is filled.

If the correct continuity is not obtained, replace the oil level switch (page 10-2).

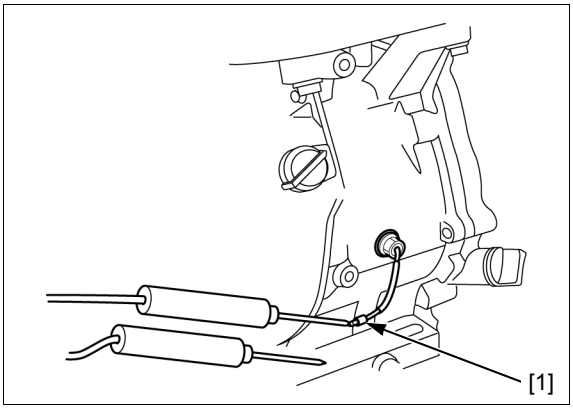

ENGINE STOP SWITCH INSPECTION

Remove the engine stop switch connector [1].

Check the continuity between the terminal and engine ground at each switch position.

Switch position	Continuity
ON	No
OFF	Yes

If the correct continuity is not obtained, replace the engine stop switch (page 10-2).

NOTE:
- Route the wire harness properly (page 2-8).

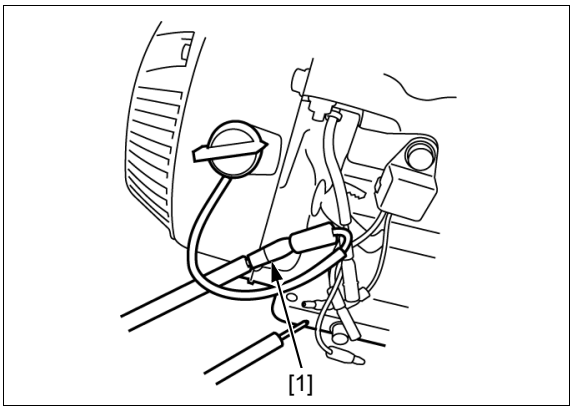

OIL ALERT UNIT INSPECTION

Remove the oil alert unit (page 10-3).

Check the continuity between the terminals, and oil alert unit body.

Unit: kΩ

		(+)		
		Bl [1]	Y [2]	Body [3]
(–)	Bl [1]	–	0.5 – 10	∞
	Y [2]	0.5 – 10	–	∞
	Body [3]	∞	∞	–

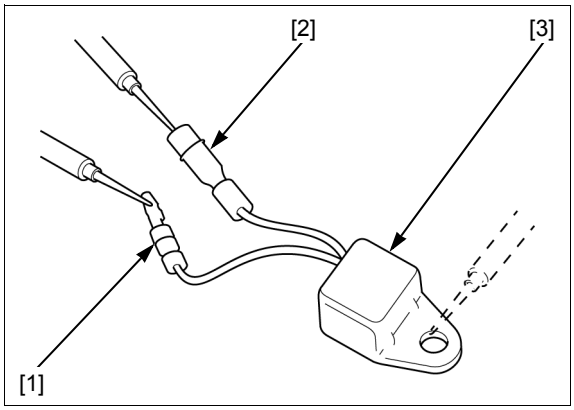

11. MUFFLER

MUFFLER REMOVAL/INSTALLATION ···· 11-2

EXHAUST PIPE STUD BOLT REPLACEMENT ····· 11-3

MUFFLER REMOVAL/INSTALLATION

⚠ CAUTION

The muffler becomes very hot during operation and remains hot for a while after stopping the engine. Be careful not to touch the muffler while it is hot. Allow it to cool before proceeding.

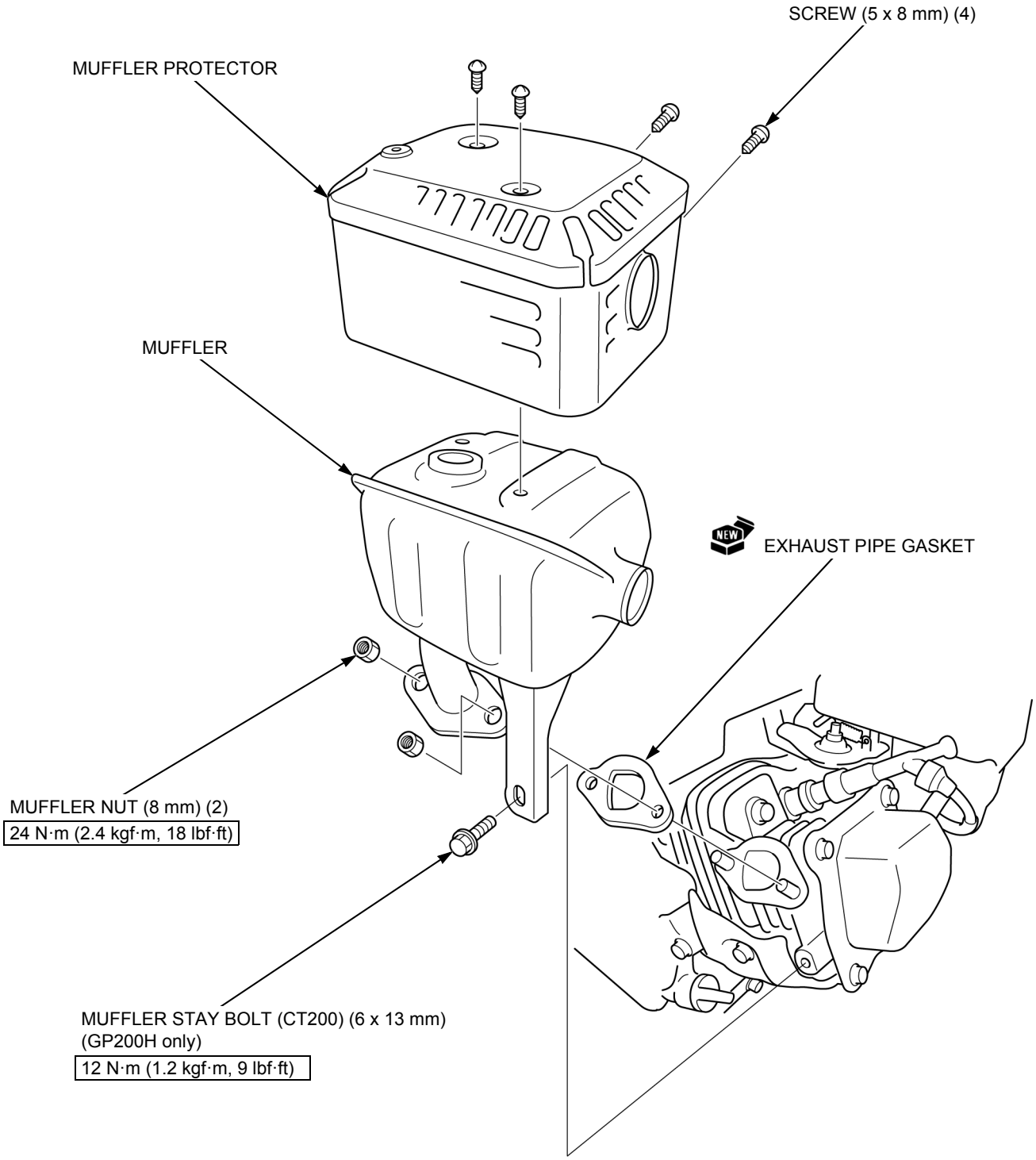

EXHAUST PIPE STUD BOLT REPLACEMENT

Remove the muffler (page 11-2).

Thread two nuts onto the exhaust pipe stud bolts [1] and tighten them together, then use a wrench to turn the stud bolt out.

Install and tighten new stud bolts until they are the specified length.

SPECIFIED LENGTH: 15 mm (0.6 in)

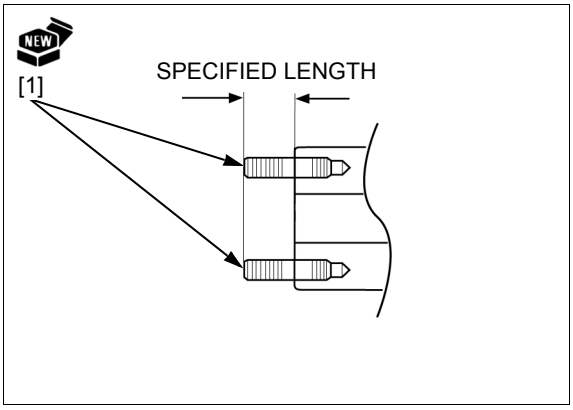

MEMO

12. CYLINDER HEAD

TOOLS ····· 12-2

CYLINDER HEAD
REMOVAL/INSTALLATION ····· 12-3

CYLINDER HEAD
DISASSEMBLY/ASSEMBLY ····· 12-4

CYLINDER HEAD/VALVES
INSPECTION ····· 12-5

VALVE GUIDE REAMING ····· 12-8

VALVE SEAT RECONDITIONING ····· 12-9

TOOLS

Seat cutter, 24.5 mm (45° EX) 07780-0010100 	Seat cutter, 27.5 mm (45° IN) 07780-0010200 	Flat cutter, 28 mm (32° IN) 07780-0012100
Flat cutter, 24 mm (32° EX) 07780-0012500 	Interior cutter, 22 mm (60° EX) 07780-0014202 	Interior cutter, 26 mm (60° IN) 07780-0014500
Cutter holder, 5.5 mm 07781-0010101 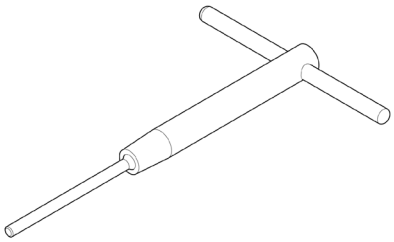	Valve guide reamer, 5.510 mm 07984-2000001 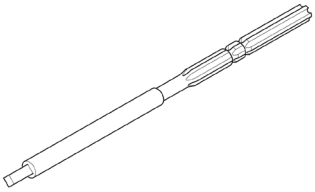	

CYLINDER HEAD REMOVAL/INSTALLATION

Set the piston at top dead center of the cylinder compression stroke (page 3-7).

Remove the following:

- Fan cover (page 5-2)
- Carburetor (page 6-5)
- Control base (page 7-3)
- Muffler (page 11-2)

After installation, inspect following:

- Valve clearance (page 3-7)
- Cylinder compression (page 12-5)

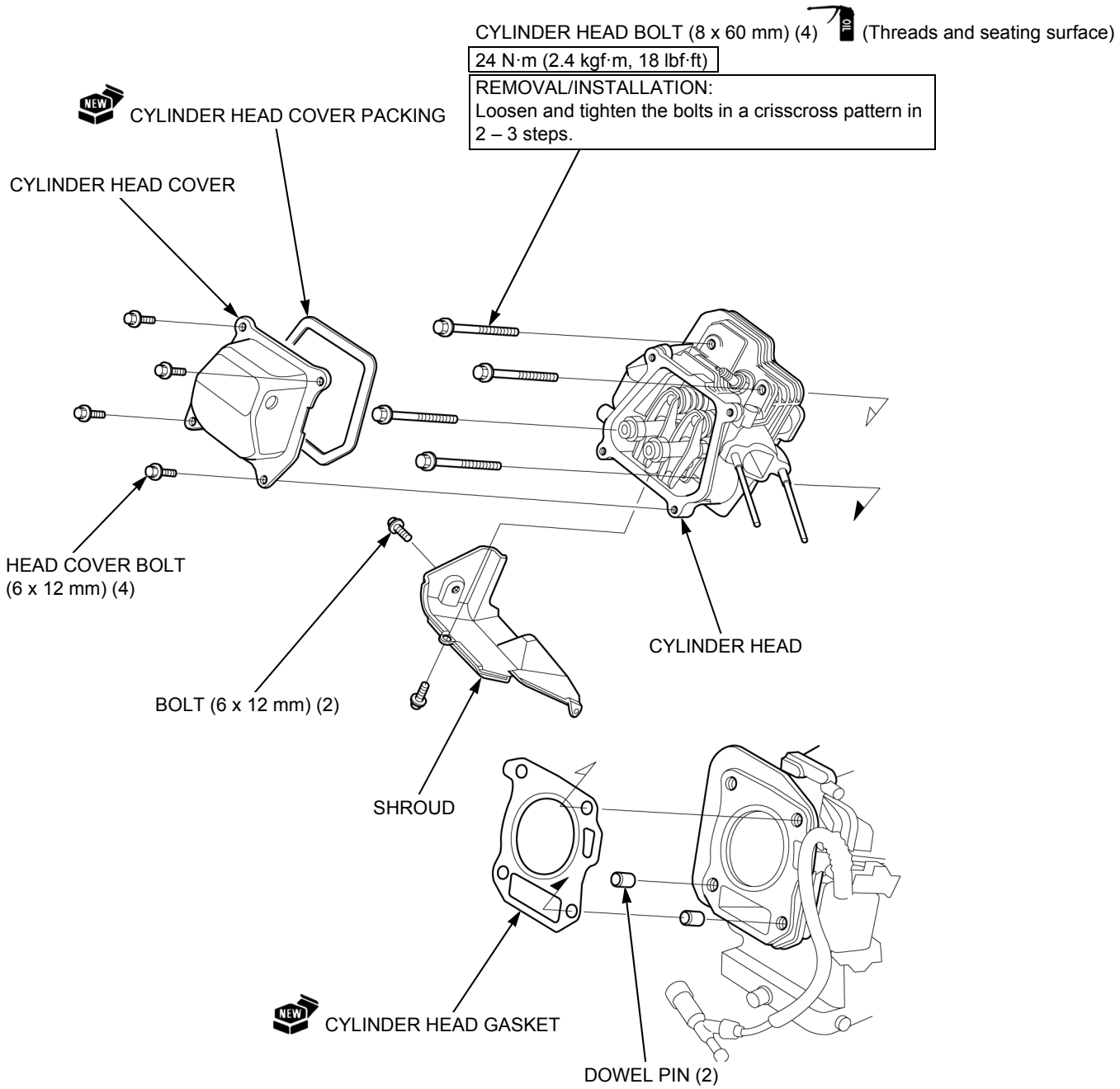

CYLINDER HEAD DISASSEMBLY/ASSEMBLY

Remove the cylinder head (page 12-3).

VALVE SPRING RETAINER

REMOVAL:
Push down and slide the valve spring retainer [1] to the side so that the valve stem [2] slips through the hole at the side of the valve spring retainer.
Do not remove the valve spring retainers while the cylinder head is installed to the cylinder barrel, or the valve will drop into the cylinder.
INSTALLATION:
Do not interchange the intake and exhaust retainers.

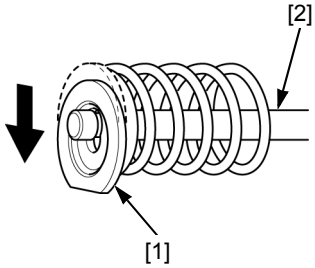

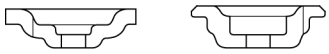

EXHAUST VALVE (Sliding surface and stem end)

INSPECTION: (page 12-7)
INSTALLATION:
Do not interchange with the intake valve.
The exhaust valve is smaller than the intake valve.

SPARK PLUG
INSPECTION: (page 3-6)

CYLINDER HEAD
INSPECTION: (page 12-5)

VALVE SPRING (2)
INSPECTION: (page 12-7)

NEW
VALVE STEM SEAL

ROTATOR

ROCKER ARM PIVOT LOCK NUT (2)
10 N·m (1.0 kgf·m, 7 lbf·ft)

INTAKE VALVE (Sliding surface and stem end)

INSPECTION: (page 12-7)
INSTALLATION:
Do not interchange with the exhaust valve.
The intake valve is larger than the exhaust valve.

PUSH ROD GUIDE PLATE

ROCKER ARM PIVOT (2)
(Threads and pivot)

ROCKER ARM PIVOT BOLT (2)
(Threads and seating surface)
24 N·m (2.4 kgf·m, 18 lbf·ft)

PUSH ROD

INSPECTION: (page 12-8)
ASSEMBLY:
Before installing the push rods, check the ends of the push rod for wear.
Be sure the ends of the push rods are firmly seated in the lifters.

VALVE ROCKER ARM (Tappet surface and pivot)

INSTALLATION:
Before installing the valve rocker arm, check for wear on the surfaces of the rocker arm that contact the pivot bolt, push rod, and valve stem.

CYLINDER HEAD/VALVES INSPECTION

CYLINDER COMPRESSION CHECK

Start the engine and warm up to normal operating temperature.

Turn the engine stop switch to the OFF position.

Turn the fuel valve lever to the OFF position, and then loosen the drain screw of the carburetor to drain the fuel completely (page 6-3).

Remove the spark plug (page 3-6).

Pull the recoil starter several times to expel unburned gas.

Attach a commercially available compression gauge [1] to the spark plug hole.

Pull the recoil starter forcefully to measure stable cylinder compression.

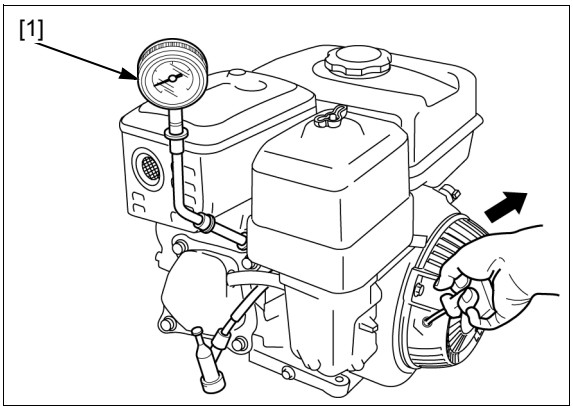

CYLINDER COMPRESSION:

GP160H: 0.49 – 0.69 MPa (5.0 – 7.0 kgf/cm^2, 71 – 100 psi)/600 min-1 (rpm)

GP200H: 0.35 MPa (3.6 kgf/cm^2, 51 psi) /600 min^{-1} (rpm)

CYLINDER HEAD WARPAGE

Check the spark plug hole and valve areas for cracks.

Clean any gasket material from the cylinder head mating surface and check the cylinder head warpage using a straightedge [1] and feeler gauge [2].

NOTE:

- Be careful not the damage the mating surface.

SERVICE LIMIT: 0.10 mm (0.004 in)

If the measurement is more than the service limit, replace the cylinder head.

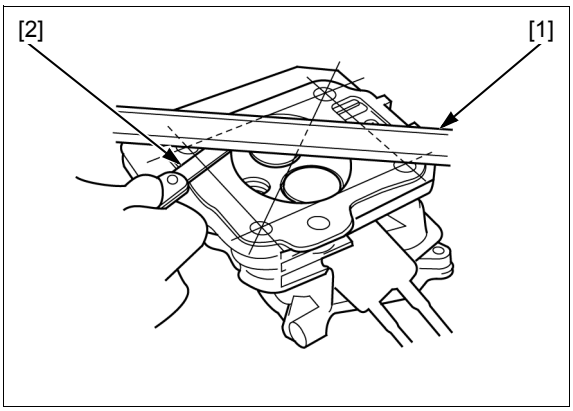

VALVE SEAT WIDTH

Remove the carbon deposits from the combustion chamber (page 3-8).

Inspect each valve face for irregularities.

If necessary, replace the valve.

Apply a light coat of Prussian Blue or erasable felt-tipped marker ink to each valve seat.

Insert the valve, and snap it closed against its seat several times. Be sure the valve does not rotate on the seat.

The transferred marking compound will show any area of the valve face that is not concentric.

Measure the valve seat width of the cylinder head.

STANDARD: 0.70 – 0.90 mm (0.028 – 0.035 in)

SERVICE LIMIT: 2.0 mm (0.08 in)

If the measurement is more than the service limit, recondition the valve seat (page 12-9).

Check whether the valve seat contact area of the valve is too high or too low.

If the valve seat is too high or too low, recondition the valve seat (page 12-9).

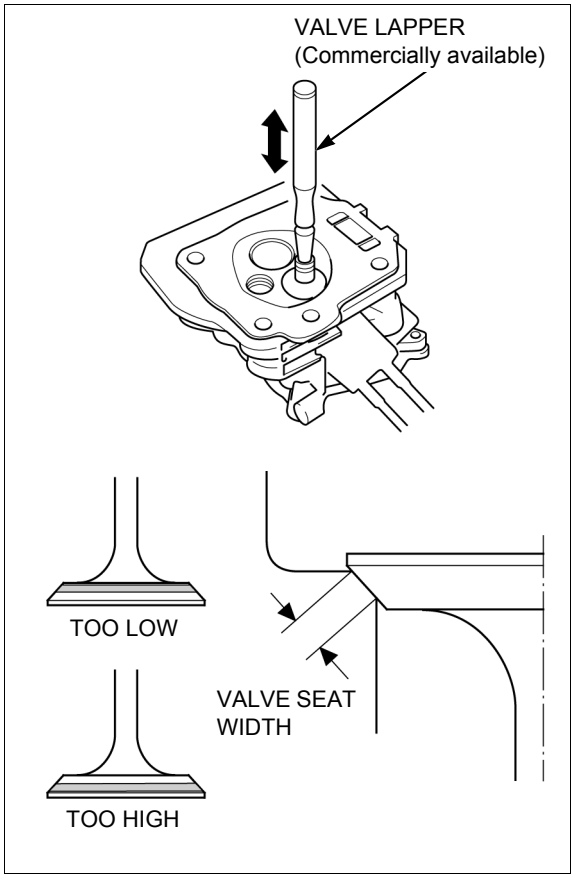

VALVE GUIDE I.D.

Ream the valve guide to remove any carbon deposits before measuring the guide [1] I.D.

TOOL:
Valve guide reamer 5.510 mm [2] 07984-2000001

NOTICE

- *Turn the valve guide reamer (special tool) clockwise, never counterclockwise.*
- *Continue to rotate the special tool while removing it from the valve guide.*

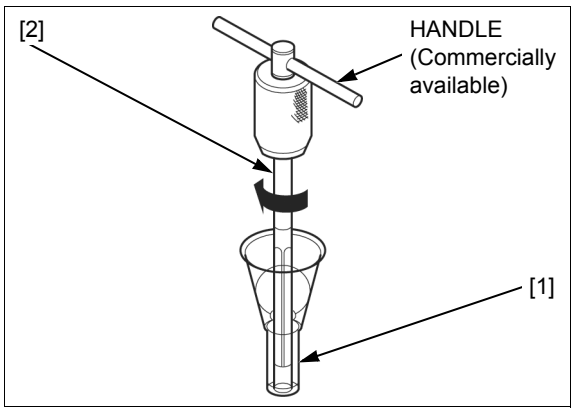

Measure and record each valve guide I.D.

STANDARD: 5.500 – 5.512 mm (0.2165 – 0.2170 in)

SERVICE LIMIT: 5.572 mm (0.2194 in)

If the measured valve guide I.D. is more than the service limit, replace the cylinder head (page 12-4).

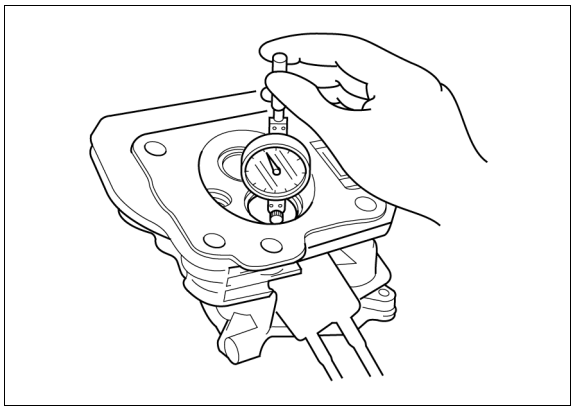

VALVE FACE/VALVE STEM O.D.

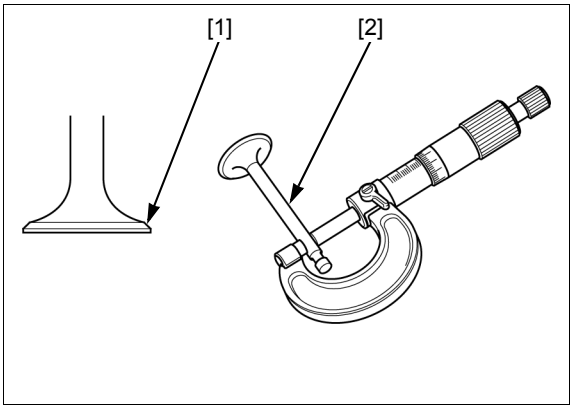

Inspect each valve face [1] for irregularities.

If necessary, replace the valve.

Inspect each valve [2] for bending or abnormal stem wear.

If necessary, replace the valve.

Measure and record each valve stem O.D.

STANDARD:
IN: 5.468 – 5.480 mm (0.2153 – 0.2157 in)
EX: 5.425 – 5.440 mm (0.2136 – 0.2142 in)

SERVICE LIMIT:
IN: 5.318 mm (0.2094 in)
EX: 5.275 mm (0.2077 in)

If the measurement is less than the service limit, replace the valve.

GUIDE-TO-STEM CLEARANCE

Subtract each valve stem O.D. from the corresponding guide I.D. to obtain the guide-to-stem clearance.

STANDARD:
IN: 0.020 – 0.044 mm (0.0008 – 0.0017 in)
EX: 0.060 – 0.087 mm (0.0024 – 0.0034 in)

SERVICE LIMIT:
IN: 0.10 mm (0.004 in)
EX: 0.12 mm (0.005 in)

If the calculated clearance is more than the service limit, replace the valve and cylinder head as a set (page 12-4).

VALVE SPRING FREE LENGTH/ PERPENDICULARITY

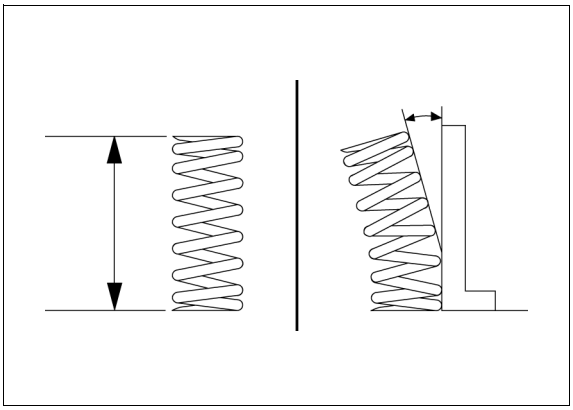

Measure the valve spring free length.

STANDARD: 30.5 mm (1.20 in)

SERVICE LIMIT: 29.0 mm (1.14 in)

If the measured length is less than the service limit, replace the valve spring.

Measure the valve spring perpendicularity.

SERVICE LIMIT: 1.5° max.

If the measured perpendicularity is more than the service limit, replace the valve spring.

PUSH ROD RUNOUT

Check both ends of the push rod for wear.

Check the push rod for straightness.

If necessary, replace the push rod.

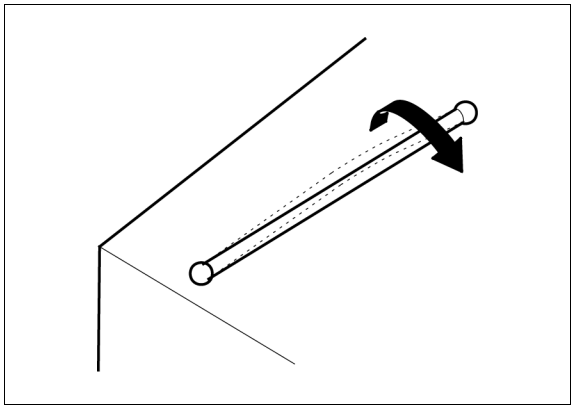

VALVE GUIDE REAMING

For best results, be sure the cylinder head is at room temperature before reaming valve guides.

Coat the reamer and valve guide with cutting oil.

TOOL:
Valve guide reamer 5.510 mm [1] 07984-2000001

Rotate the reamer clockwise through the valve guide the full length of the reamer.

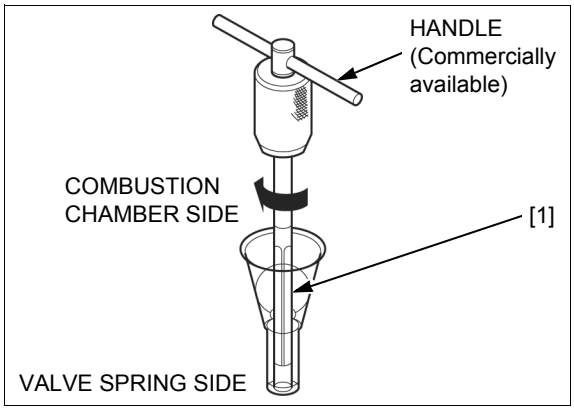

NOTICE

- *Turn the special tool (valve guide reamer) clockwise, never counterclockwise.*
- *Continue to rotate the special tool while removing it from the valve guide.*

Thoroughly clean the cylinder head to remove any cutting residue.

Check the valve guide bore; it should be straight, round and centered in the valve guide. Insert the valve and check operation. If the valve does not operate smoothly, the guide may have been bent during installation.

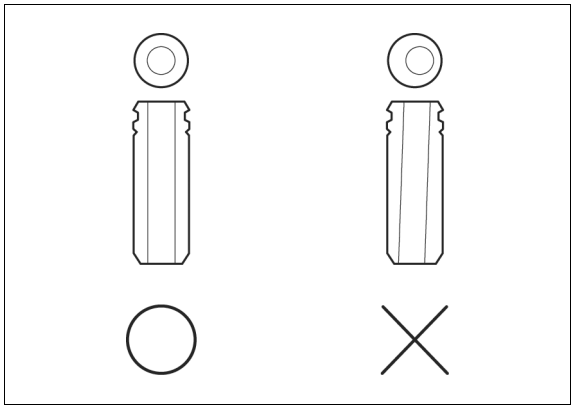

Replace the cylinder head if it is bent or damaged (page 12-4).

Check the valve stem-to-guide clearance (page 12-7).

VALVE SEAT RECONDITIONING

Inspect the valve seat contact area (page 12-6).

Using a 45° seat cutter, remove any roughness or irregularities from the seat.

If the contact area is too low on the valve, the seat must be raised using a 60° interior cutter.

If the contact area is too high on the valve, the seat must be lowered using a 32° flat cutter.

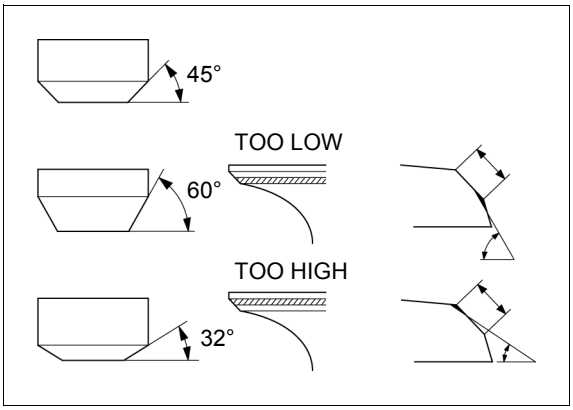

Valve seat cutters [1]/grinder or equivalent valve seat refacing equipment is recommended to correct a worn valve seat.

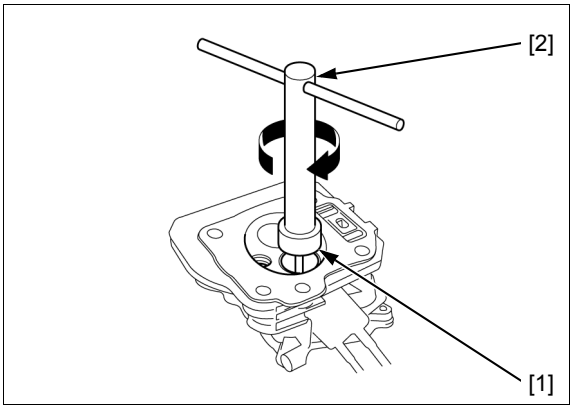

NOTICE

- *Turn the cutter clockwise, never counterclockwise.*
- *Continue to turn the cutter as you lift it from the valve seat.*

TOOLS:

Cutter holder, 5.5 mm [2]	**07781-0010101**
Seat cutter, 27.5 mm (45° IN)	**07780-0010200**
Seat cutter, 24.5 mm (45° EX)	**07780-0010100**
Flat cutter, 28 mm (32° IN)	**07780-0012100**
Flat cutter, 24 mm (32° EX)	**07780-0012500**
Interior cutter, 26 mm (60° IN)	**07780-0014500**
Interior cutter, 22 mm (60° EX)	**07780-0014202**

Make a light pass with the 45° cutter to remove any possible burrs at the edge of the seat.

Be sure that the width of the finished valve seat is within specification.

STANDARD: 0.70 – 0.90 mm (0.028 – 0.035 in)

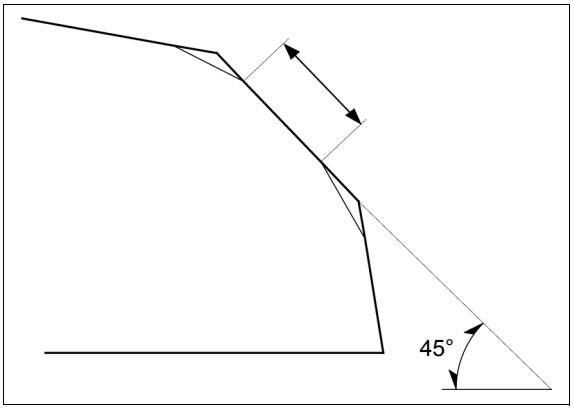

Lap the valves into their seats, using a commercially available valve lapper and lapping compound.

After lapping, wash all residual compound off the cylinder head and valve.

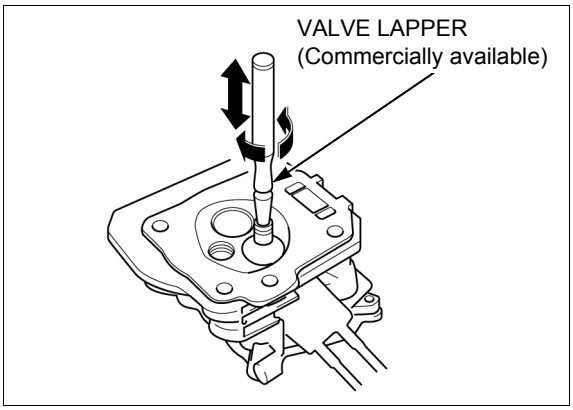

NOTICE

- *Do not push the valve against the seat with force during lapping. Apply a light pass with the valve lapper.*
- *Avoid lapping the valve in the same position as it causes uneven wear. Lap the valve by turning the lapper slowly.*
- *Take care not to allow the lapping compound to enter the gap between the stem and guide.*

MEMO

13. CRANKCASE

TOOLS ····· 13-2

CRANKCASE COVER REMOVAL/INSTALLATION ····· 13-3

CRANKSHAFT/CAMSHAFT/PISTON REMOVAL/INSTALLATION ····· 13-4

PISTON DISASSEMBLY/ASSEMBLY····· 13-5

CRANKCASE COVER/CYLINDER BARREL/ PISTON/CONNECTING ROD/CRANKSHAFT/ CAMSHAFT INSPECTION ····· 13-6

CRANKSHAFT BEARING/OIL SEAL REPLACEMENT ····· 13-12

TOOLS

Bearing driver attachment, 37 x 40 mm 07746-0010200 	Bearing driver attachment, 52 x 55 mm 07746-0010400 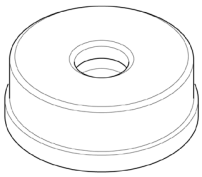	Pilot, 25 mm 07746-0040600 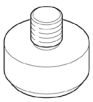
Driver handle 07749-0010000 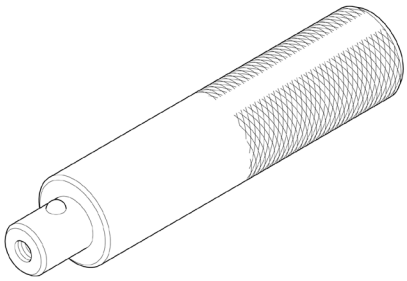		

CRANKCASE COVER REMOVAL/INSTALLATION

Drain the engine oil (page 3-3).

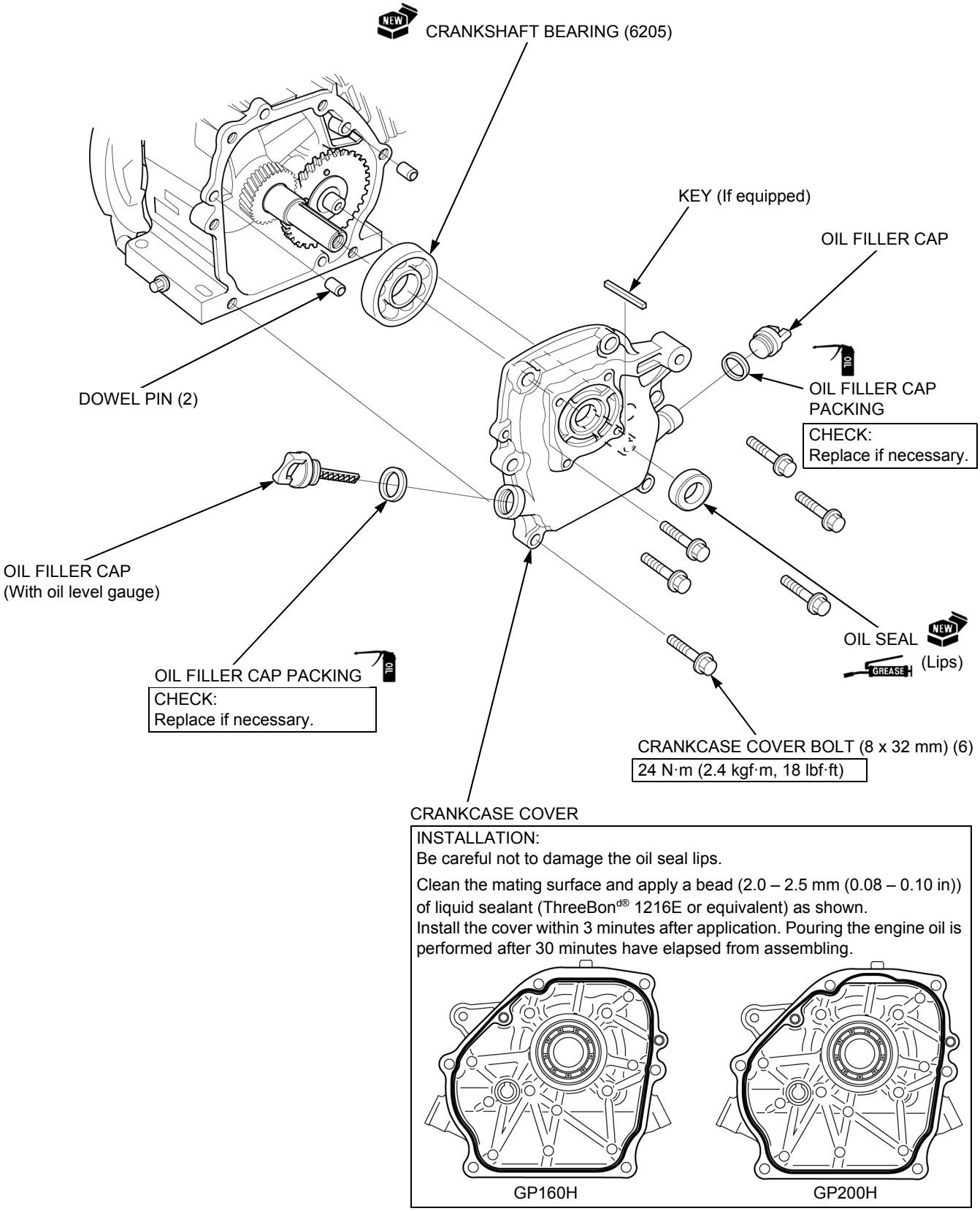

INSTALLATION:
Be careful not to damage the oil seal lips.

Clean the mating surface and apply a bead (2.0 – 2.5 mm (0.08 – 0.10 in)) of liquid sealant (ThreeBond® 1216E or equivalent) as shown.
Install the cover within 3 minutes after application. Pouring the engine oil is performed after 30 minutes have elapsed from assembling.

GP160H GP200H

CRANKSHAFT/CAMSHAFT/PISTON REMOVAL/INSTALLATION

Remove the following:

- Fuel tank (page 6-3)
- Flywheel (page 8-4)
- Cylinder head (page 12-3)
- Crankcase cover (page 13-3)

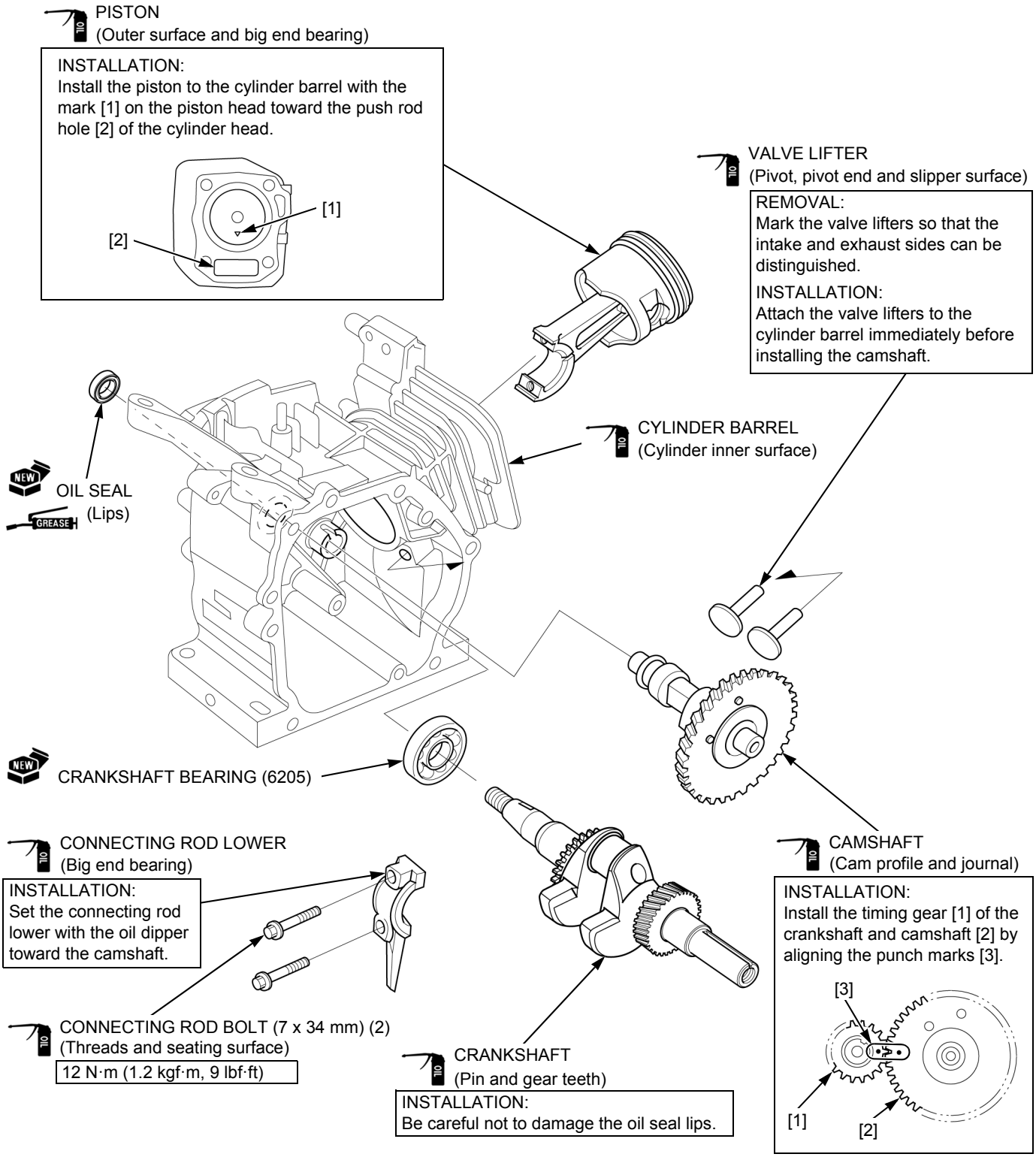

PISTON DISASSEMBLY/ASSEMBLY

Remove the piston (page 13-4).

PISTON RING SET (Entire surface)

INSPECTION: (page 13-8)
INSTALLATION:
To install the oil ring, install the spacer [1] first, and then install the side rails [2].
Be sure that the top ring [3] and second ring [4] are not interchanged.
Install the top ring and second ring on the piston with the maker mark side facing up.
Check that the piston rings rotate smoothly after installing them.
Space the piston ring end gaps 120° apart, and do not align the ring end gaps with the piston pin bore.

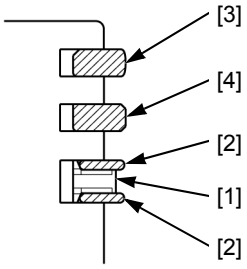

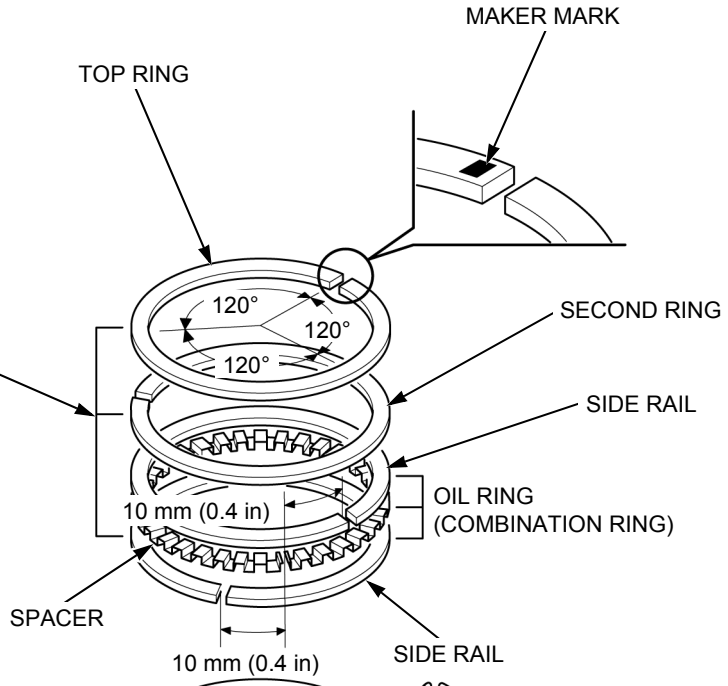

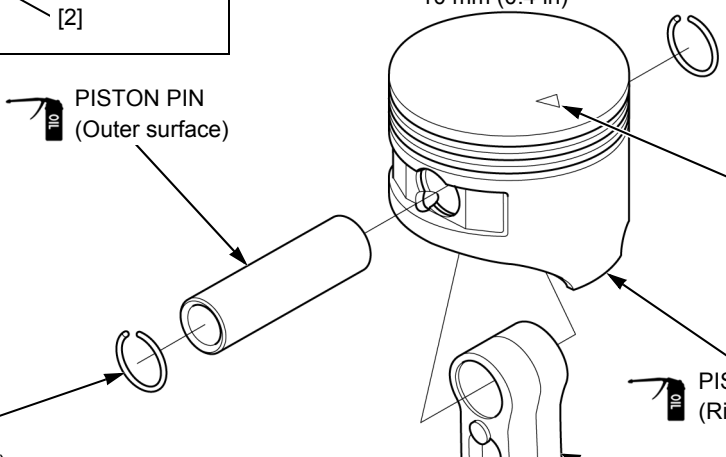

PISTON PIN CLIP (2)

INSTALLATION:
Install by setting one end of the piston pin clip in the groove of the piston pin bore, holding the other end with long needle pliers, and rotating the clip in.
Do not align the end gap [1] of the piston pin clip with the cutout [2] of the piston pin bore.

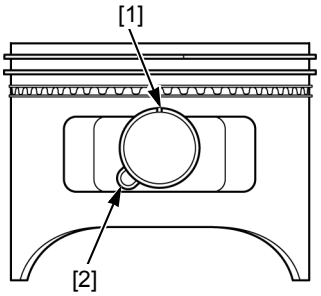

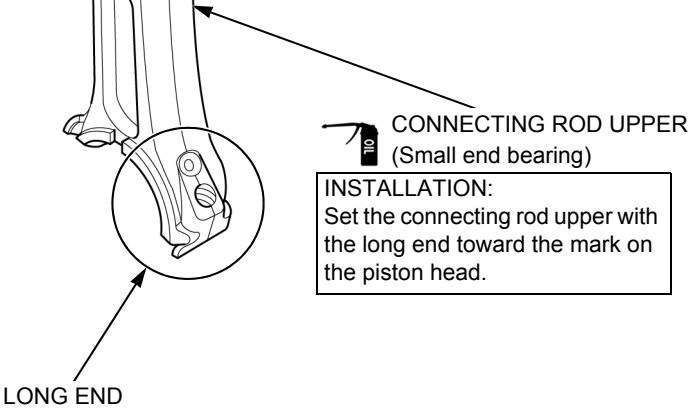

INSTALLATION:
Set the connecting rod upper with the long end toward the mark on the piston head.

CRANKCASE COVER/CYLINDER BARREL/PISTON/CONNECTING ROD/ CRANKSHAFT/CAMSHAFT INSPECTION

CAMSHAFT JOURNAL I.D.

CRANKCASE COVER SIDE

Measure the camshaft journal I.D. of the crankcase cover.

STANDARD: 14.000 – 14.027 mm (0.5512 – 0.5522 in)

SERVICE LIMIT: 14.048 mm (0.5531 in)

If the measurement is more than the service limit, replace the crankcase cover.

Inspect the camshaft O.D. (page 13-11).

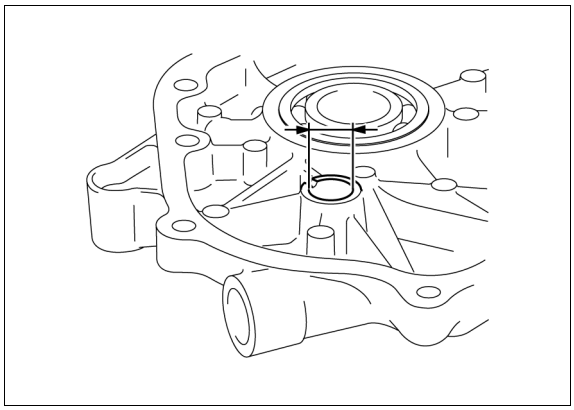

CYLINDER BARREL SIDE

Measure the camshaft journal I.D. of the cylinder barrel assembly.

STANDARD: 14.000 – 14.018 mm (0.5512 – 0.5519 in)

SERVICE LIMIT: 14.048 mm (0.5531 in)

If the measurement is more than the service limit, replace the cylinder barrel.

Inspect the camshaft O.D. (page 13-11).

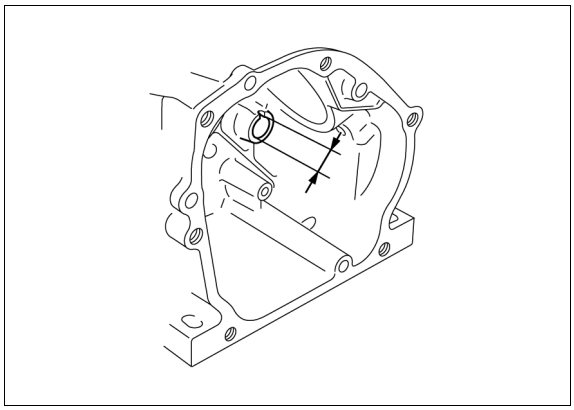

CYLINDER SLEEVE I.D.

Measure and record the cylinder I.D. at three levels in both the "X" axis (perpendicular to crankshaft) and the "Y" axis (parallel to crankshaft). Take the maximum reading to determine cylinder wear and taper.

STANDARD: 68.000 – 68.020 mm (2.6772 – 2.6779 in)

SERVICE LIMIT: 68.165 mm (2.6837 in)

If the measurement is more than the service limit, replace the cylinder barrel.

Inspect the piston skirt O.D. (page 13-7).

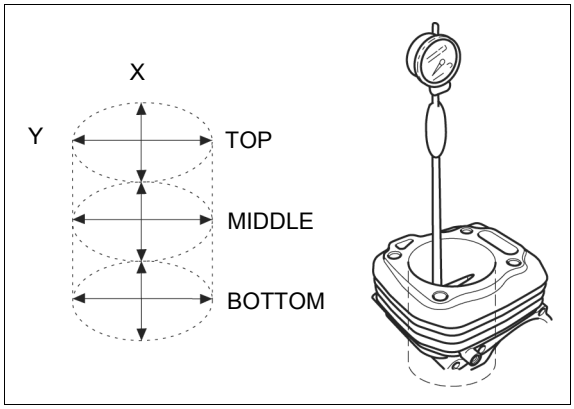

PISTON SKIRT O.D.

Measure and record the piston skirt O.D. at a point 10 mm (0.4 in) from the bottom of the skirt and 90° to the piston pin bore.

STANDARD:
GP160: 67.965 – 67.985 mm (2.6758 – 2.6766 in)
GP200: 67.965 – 67.982 mm (2.6758 – 2.6765 in)

SERVICE LIMIT: 67.845 mm (2.6711 in)

If the measurement is less than the service limit, replace the piston.

Inspect the cylinder sleeve I.D. (page 13-6).

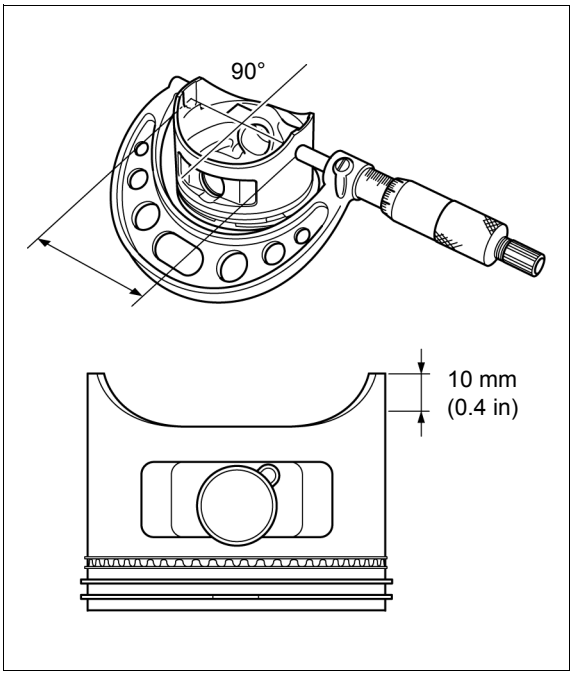

PISTON-TO-CYLINDER CLEARANCE

Subtract the piston skirt O.D. from the cylinder sleeve I.D. to obtain the piston-to-cylinder clearance.

STANDARD:
GP160: 0.015 – 0.055 mm (0.0006 – 0.0022 in)
GP200: 0.018 – 0.055 mm (0.0007 – 0.0022 in)

SERVICE LIMIT: 0.12 mm (0.005 in)

If the calculated clearance is more than the service limit, replace the piston and recheck the clearance.

If the clearance is still more than the service limit with a new piston, replace the cylinder barrel.

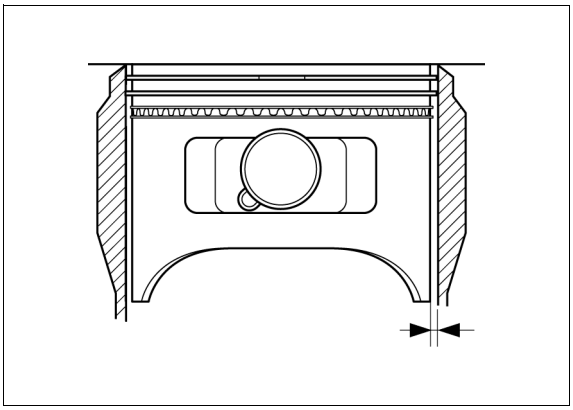

PISTON PIN BORE I.D.

Measure and record the piston pin bore I.D. of the piston.

STANDARD: 18.002 – 18.008 mm (0.7087 – 0.7090 in)

SERVICE LIMIT: 18.048 mm (0.7105 in)

If the measurement is more than the service limit, replace the piston.

Inspect the piston pin O.D. (page 13-8).

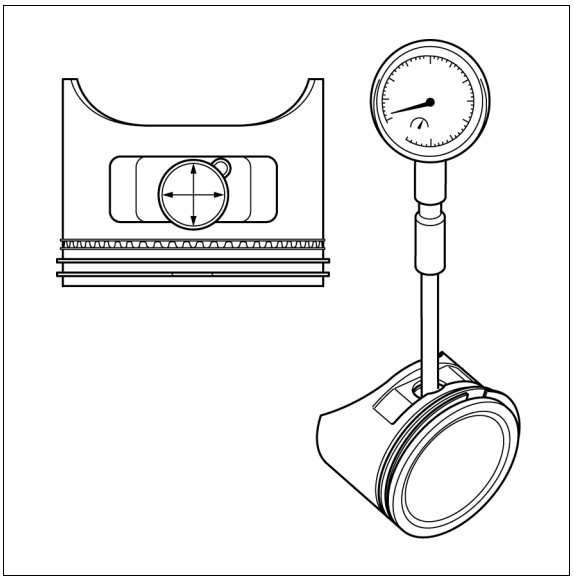

PISTON PIN O.D.

Measure and record the piston pin O.D. at three points (both ends and middle). Take the minimum reading to determine piston pin O.D.

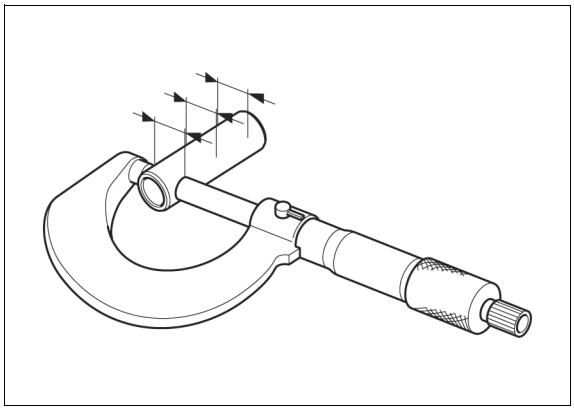

STANDARD: 17.992 – 17.998 mm (0.7083 – 0.7086 in)

SERVICE LIMIT: 17.954 mm (0.7068 in)

If the measurement is less than the service limit, replace the piston pin.

Inspect the piston pin bore I.D. (page 13-7).

Inspect the connecting rod small end I.D. (page 13-10).

PISTON PIN-TO-PISTON PIN BORE CLEARANCE

Subtract the piston pin O.D. from the piston pin bore I.D. to obtain the piston pin-to-piston pin bore clearance.

STANDARD: 0.004 – 0.016 mm (0.0002 – 0.0006 in)

SERVICE LIMIT: 0.06 mm (0.002 in)

If the calculated clearance is more than the service limit, replace the piston pin and recheck the clearance.

If the clearance is still more than the service limit with a new piston pin, replace the piston.

PISTON RING SIDE CLEARANCE

Measure the clearance between each piston ring and ring groove of the piston using a feeler gauge.

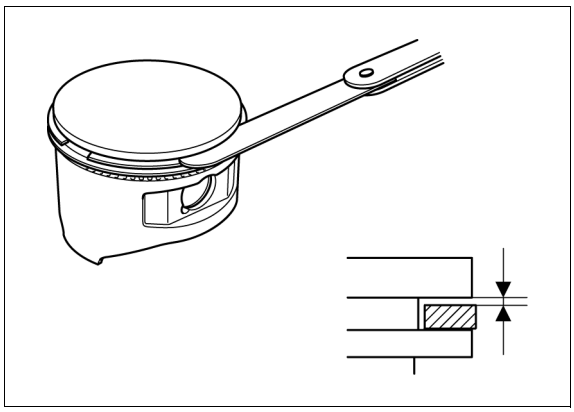

STANDARD:
Top: 0.035 – 0.070 mm (0.0014 – 0.0028 in)
Second: 0.045 – 0.080 mm (0.0018 – 0.0032 in)

SERVICE LIMIT:
Top: 0.15 mm (0.006 in)
Second: 0.15 mm (0.006 in)

If any of the measurements is more than the service limit, inspect the piston ring width.

If the piston ring width is normal, replace the piston and recheck the clearance.
If necessary, replace the piston rings (top, second, oil) as a set and recheck the clearance.
If any of the measurements is still more than the service limit with the piston rings, replace the piston.

PISTON RING WIDTH

Measure each piston ring width.

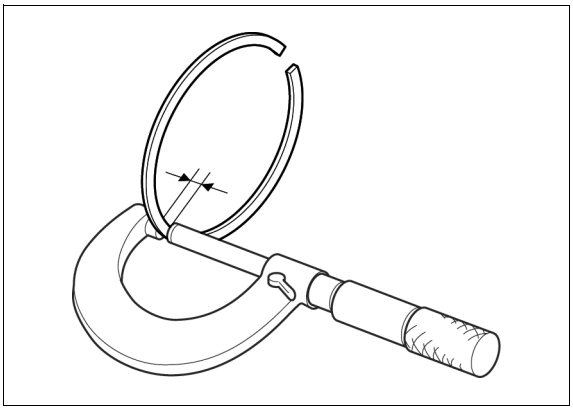

STANDARD:
Top: 0.950 – 0.970 mm (0.0374 – 0.0382 in)
Second: 0.940 – 0.960 mm (0.0370 – 0.0378 in)

SERVICE LIMIT:
Top: 0.93 mm (0.037 in)
Second: 0.92 mm (0.036 in)

If any of the measurements is less than the service limit, replace the piston rings (top, second, oil) as a set.

PISTON RING END GAP

Before inspection, check whether the cylinder sleeve I.D. is within the specification (page 13-6).

Measure each piston ring [1] end gap using a feeler gauge.

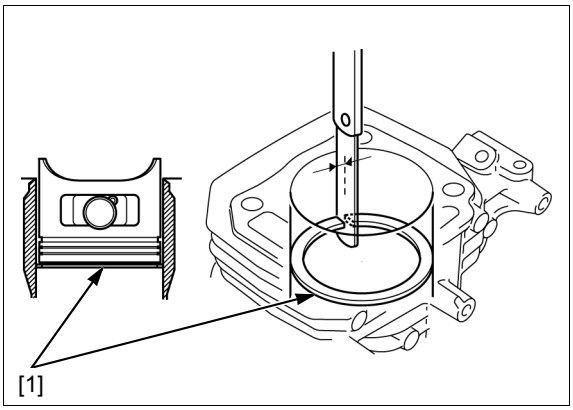

STANDARD:
Top: 0.200 – 0.350 mm (0.0079 – 0.0138 in)
Second: 0.350 – 0.500 mm (0.0138 – 0.0197 in)
Oil (side rail): 0.20 – 0.70 mm (0.008 – 0.028 in)

SERVICE LIMIT:
Top: 1.0 mm (0.04 in)
Second: 1.0 mm (0.04 in)
Oil (side rail): 1.0 mm (0.04 in)

If any of the measurements is more than the service limit, replace the piston rings (top, second, oil) as a set.

CONNECTING ROD BIG END SIDE CLEARANCE

Measure the clearance between the connecting rod big end and crankshaft using a feeler gauge.

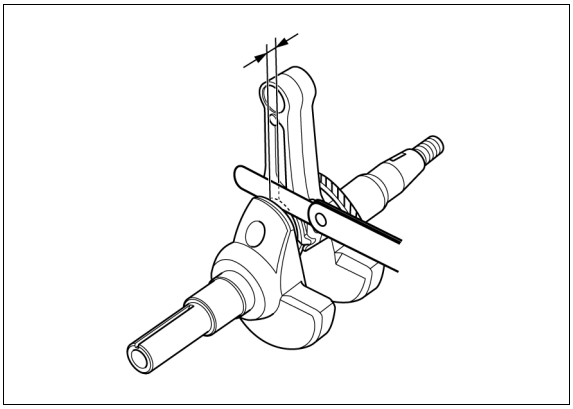

STANDARD: 0.30 – 0.70 mm (0.012 – 0.018 in)

SERVICE LIMIT: 1.1 mm (0.04 in)

If the measurement is more than the service limit, replace the connecting rod (page 13-5) and recheck the clearance.

If the clearance is still more than the service limit with a new connecting rod, replace the crankshaft.

CONNECTING ROD SMALL END I.D.

Measure the connecting rod small end I.D.

STANDARD: 18.006 – 18.017 mm (0.7089 – 0.7093 in)

SERVICE LIMIT: 18.07 mm (0.711 in)

If the measurement is more than the service limit, replace the connecting rod.

Inspect the piston pin O.D. (page 13-8).

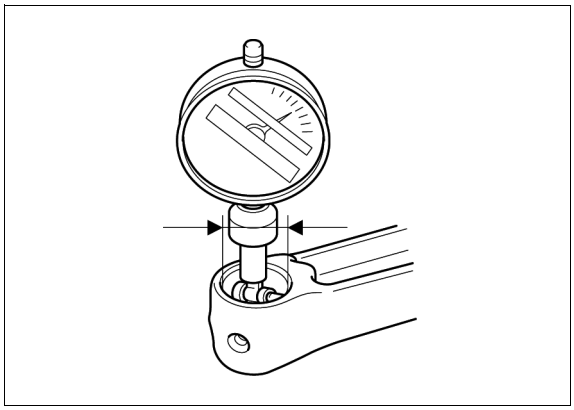

CONNECTING ROD BIG END I.D.

Apply engine oil to the connecting rod bolt threads and seating surface.

Set the connecting rod lower to the connecting rod upper and tighten the connecting rod bolts to the specified torque.

TORQUE: 12 N·m (1.2 kgf·m, 9 lbf·ft)

Measure the connecting rod big end I.D.

STANDARD: 30.015 – 30.025 mm (1.1817 – 1.1821 in)

SERVICE LIMIT: 30.066 mm (1.1837 in)

If the measurement is more than the service limit, replace the connecting rod (page 13-5).

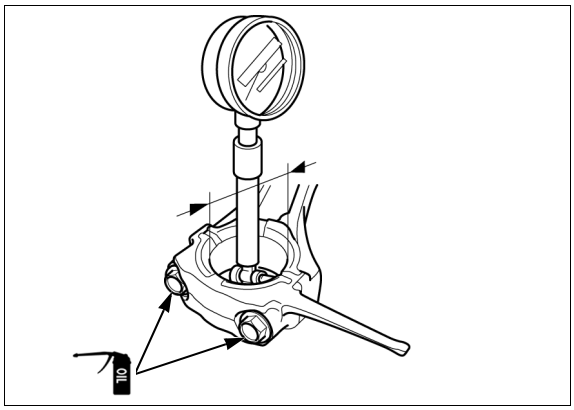

CRANKPIN O.D.

Measure the crankpin O.D. of the crankshaft.

STANDARD: 29.970 – 29.980 mm (1.1799 – 1.1803 in)

SERVICE LIMIT: 29.92 mm (1.178 in)

If the measurement is less than the service limit, replace the crankshaft.

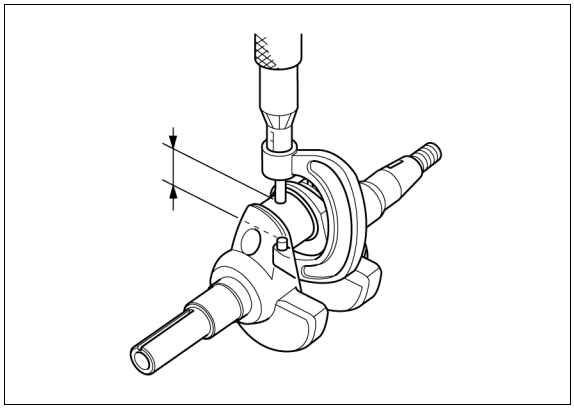

CONNECTING ROD BIG END OIL CLEARANCE

Clean all oil from the crankpin and connecting rod big end surface.

Apply engine oil to the connecting rod bolt threads and seating surface.

Place a piece of plastigauge on the crankpin, install the connecting rod upper and the connecting rod lower, and tighten the connecting rod bolts to the specified torque.

TORQUE: 12 N·m (1.2 kgf·m, 9 lbf·ft)

NOTE:
Do not rotate the crankshaft while the plastigauge is in place.

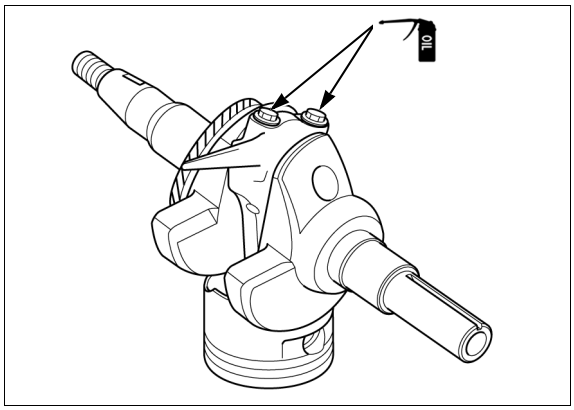

Remove the connecting rod and measure the plastigauge.

STANDARD: 0.035 – 0.055 mm (0.0014 – 0.0022 in)

SERVICE LIMIT: 0.12 mm (0.005 in)

If the clearance is more than the service limit, inspect the connecting rod big end I.D. and the crankpin O.D.

If necessary replace the part that is not within the service limit and recheck the clearance.

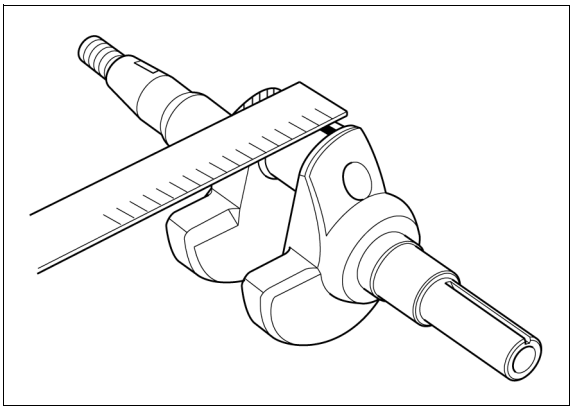

CRANKSHAFT RUNOUT

Set the crankshaft on V-blocks and measure the runout using a dial indicator.

SERVICE LIMIT: 0.10 mm (0.004 in)

If the measured runout is more than the service limit, replace the crankshaft.

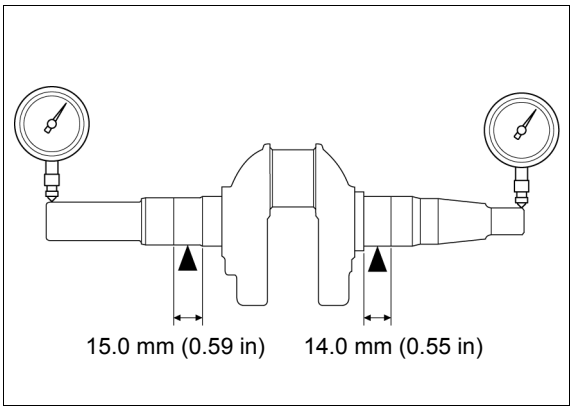

CAMSHAFT CAM HEIGHT

Measure the cam height of the camshaft.

STANDARD:
IN: 27.500 – 27.900 mm (1.0827 – 1.0984 in)
EX: 27.547 – 27.947 mm (1.0845 – 1.0984 in)

SERVICE LIMIT:
IN: 27.450 mm (1.0807 in)
EX: 27.500 mm (1.0827 in)

If the measurement is less than the service limit, replace the camshaft.

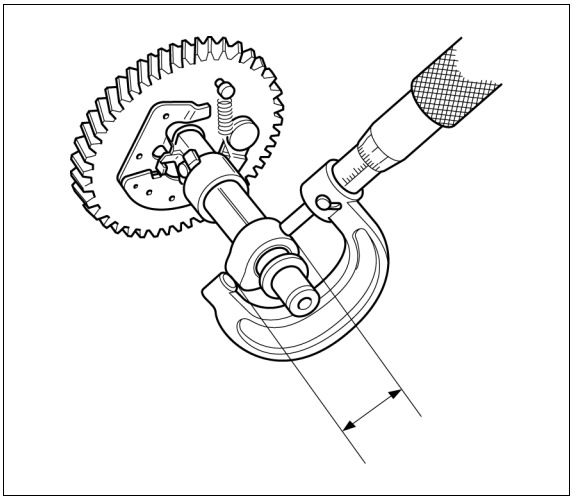

CAMSHAFT O.D.

Measure the O.D. of the camshaft.

STANDARD: 13.966 – 13.984 mm (0.5498 – 0.5506 in)

SERVICE LIMIT: 13.916 mm (0.5479 in)

If the measurement is less than the service limit, replace the camshaft.

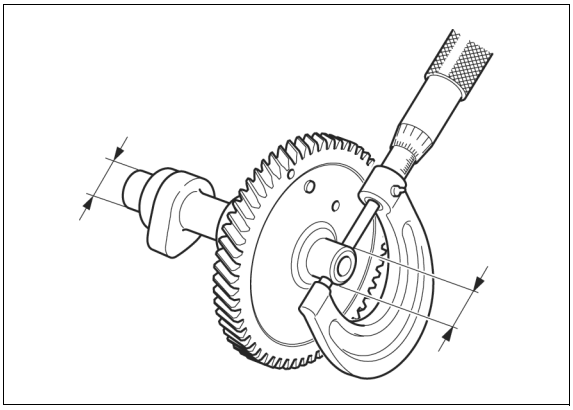

DECOMPRESSOR WEIGHT

Check for worn and weakened spring.

If the weight return spring [1] is worn or weakened, replace it.

Check that the decompressor weight moves smoothly.

If the decompressor weight does not move correctly, replace the camshaft.

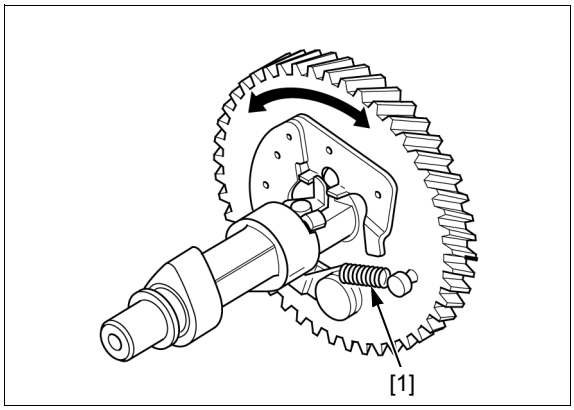

CRANKSHAFT BEARING

Turn the inner race of the bearing with your finger and check for play.

Replace the bearing if it is noisy or has excessive play.

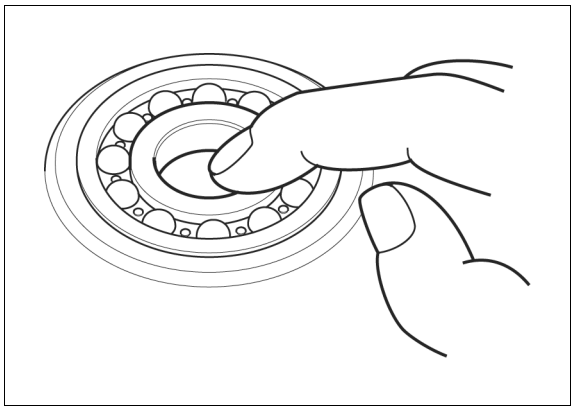

CRANKSHAFT BEARING/OIL SEAL REPLACEMENT

CRANKSHAFT BEARING (6205)

Remove the oil seal and drive out the crankshaft bearing.

Drive a new crankshaft bearing [1] until it is fully seated on the end using the special tools.

TOOLS:

Bearing driver attachment, 52 x 55 mm [2]	**07746-0010400**
Pilot, 25 mm [3]	**07746-0040600**
Driver handle [4]	**07749-0010000**

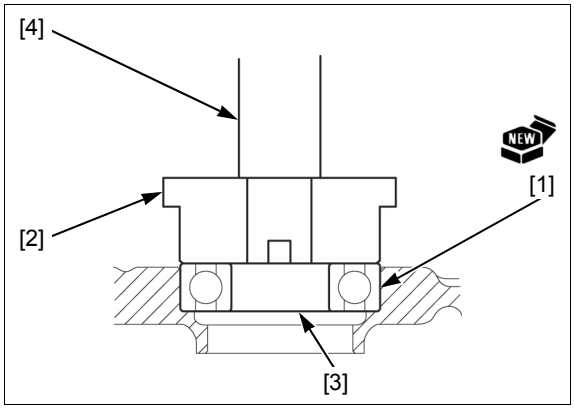

CRANKSHAFT OIL SEAL

CRANKCASE COVER SIDE

Remove the oil seal.

Drive a new oil seal [1] in the position as shown using the special tools.

INSTALLATION HEIGHT: 5.5 mm (0.22 in)

TOOLS:

Bearing driver attachment, 37 x 40 mm [2]	**07746-0010200**
Driver handle [3]	**07749-0010000**

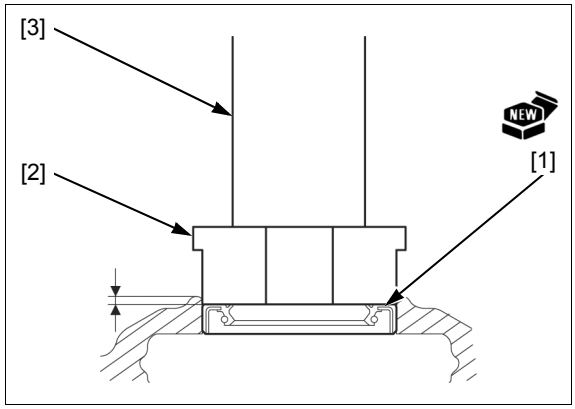

CYLINDER BARREL SIDE

Remove the oil seal.

Drive a new oil seal [1] in the position as shown using the special tools.

INSTALLATION HEIGHT: 1.5 mm (0.06 in)

TOOLS:

Bearing driver attachment, 37 x 40 mm [2]	**07746-0010200**
Driver handle [3]	**07749-0010000**

MEMO

14. WIRING DIAGRAMS

WIRING DIAGRAMS ····· 14-2

WIRING DIAGRAMS

WITHOUT OIL ALERT UNIT:

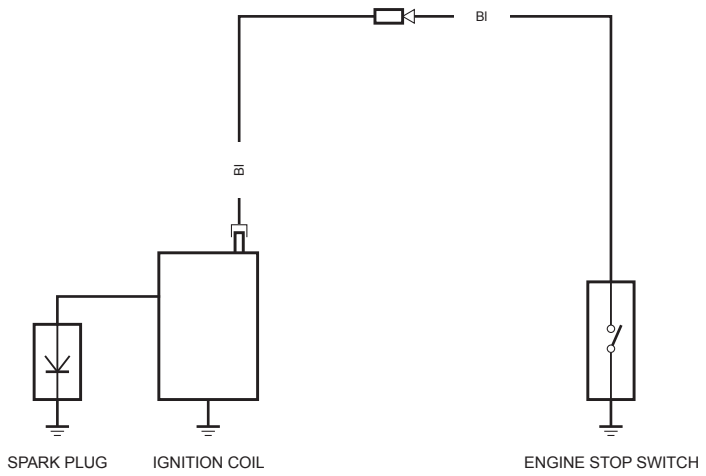

ENGINE STOP SWITCH

	IG	E
OFF	○	○
ON		

Bl	Black	Br	Brown
Y	Yellow	O	Orange
Bu	Blue	Lb	Light blue
G	Green	Lg	Light green
R	Red	P	Pink
W	White	Gr	Gray

WITH OIL ALERT UNIT:

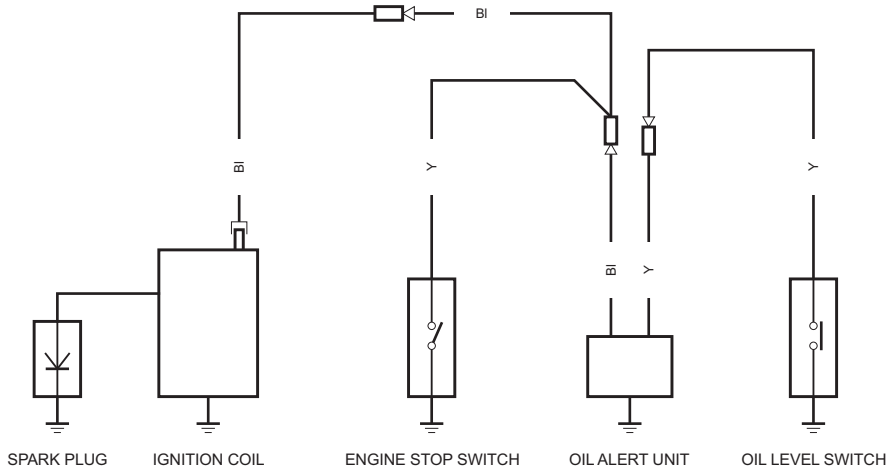

ENGINE STOP SWITCH

	IG	E
OFF	○	○
ON		

Bl	Black	Br	Brown
Y	Yellow	O	Orange
Bu	Blue	Lb	Light blue
G	Green	Lg	Light green
R	Red	P	Pink
W	White	Gr	Gray

INDEX

AIR CLEANER CHECK/CLEANING/REPLACEMENT ··· 3-4
AIR CLEANER REMOVAL/INSTALLATION ··· 6-4
BEFORE TROUBLESHOOTING ··· 4-2
CARBURETOR BODY CLEANING ··· 6-8
CARBURETOR DISASSEMBLY/ASSEMBLY ··· 6-7
CARBURETOR INSPECTION ··· 6-8
CARBURETOR REMOVAL/INSTALLATION ··· 6-6
CARBURETOR STUD BOLT REPLACEMENT ··· 6-10
CHOKE REPLACEMENT ··· 6-10
COMBUSTION CHAMBER CLEANING ··· 3-9
CONTROL BASE DISASSEMBLY/ASSEMBLY ··· 7-4
COOLING FAN/FLYWHEEL
REMOVAL/INSTALLATION ··· 8-4
CRANKCASE COVER REMOVAL/INSTALLATION ··· 13-3
CRANKCASE COVER/CYLINDER BARREL/PISTON/
CONNECTING ROD/CRANKSHAFT/CAMSHAFT
INSPECTION ··· 13-6
CRANKSHAFT BEARING/OIL SEAL
REPLACEMENT ··· 13-12
CRANKSHAFT/CAMSHAFT/PISTON
REMOVAL/INSTALLATION ··· 13-4
CYLINDER HEAD DISASSEMBLY/ASSEMBLY ··· 12-4
CYLINDER HEAD REMOVAL/INSTALLATION ··· 12-3
CYLINDER HEAD/VALVES INSPECTION ··· 12-5
DIMENSIONAL DRAWINGS ··· 1-8
DIMENSIONS AND WEIGHTS SPECIFICATIONS ··· 1-3
ENGINE OIL LEVEL CHECK/CHANGE ··· 3-3
ENGINE SPECIFICATIONS ··· 1-3
ENGINE STOP SWITCH INSPECTION ··· 10-3
ENGINE STOP SWITCH
REMOVAL/INSTALLATION ··· 10-2
EXHAUST PIPE STUD BOLT REPLACEMENT ··· 11-3
FAN COVER REMOVAL/INSTALLATION ··· 5-2
FUEL TANK AND FILTER CLEANING ··· 3-9
FUEL TANK REMOVAL/INSTALLATION ··· 6-3
FUEL TUBE CHECK ··· 3-9
GOVERNOR ADJUSTMENT ··· 7-5
GOVERNOR ARM/CONTROL BASE
REMOVAL/INSTALLATION ··· 7-3
GOVERNOR DISASSEMBLY/ASSEMBLY ··· 7-6
GOVERNOR MECHANISM ··· 7-2
HARNESS AND TUBE ROUTING ··· 2-8
IDLE SPEED CHECK/ADJUSTMENT ··· 3-7
IGNITION COIL AIR GAP CHECK/ADJUSTMENT ··· 8-6
IGNITION COIL INSPESTION ··· 8-7
IGNITION COIL REMOVAL/INSTALLATION ··· 8-3
IGNITION SYSTEM TROUBLESHOOTING ··· 8-2
LUBRICATION & SEAL POINTS ··· 2-5
MAINTENANCE SCHEDULE ··· 3-2
MAINTENANCE STANDARDS ··· 2-2
MAXIMUM SPEED ADJUSTMENT ··· 7-7
MUFFLER REMOVAL/INSTALLATION ··· 11-2
OIL ALERT UNIT INSPECTION ··· 10-4
OIL ALERT UNIT REMOVAL/INSTALLATION ··· 10-3
OIL LEVEL SWITCH INSPECTION ··· 10-3
OIL LEVEL SWITCH REMOVAL/INSTALLATION ··· 10-2
P.T.O. DIMENSIONAL DRAWINGS ··· 1-10
P.T.O. TYPE VARIATION ··· 1-2
PERFORMANCE CURVES ··· 1-5
PILOT SCREW REPLACEMENT ··· 6-9
PISTON DISASSEMBLY/ASSEMBLY ··· 13-5
RECOIL STARTER DISASSEMBLY/ASSEMBLY ··· 9-3
RECOIL STARTER INSPECTION ··· 9-6
RECOIL STARTER REMOVAL/INSTALLATION ··· 9-2
SERIAL NUMBER LOCATION ··· 1-2
SPARK PLUG CAP INSPECTION ··· 8-7
SPARK PLUG CHECK/ADJUSTMENT ··· 3-6
SPARK PLUG REPLACEMENT ··· 3-6
SPARK TEST ··· 8-6
TOOL
  FUEL SYSTEM ··· 6-2
TOOLS
  CRANKCASE ··· 13-2
  CYLINDER HEAD ··· 12-2
  SERVICE INFORMATION ··· 2-6
TORQUE VALUES ··· 2-4
TROUBLESHOOTING ··· 4-2
VALVE CLEARANCE CHECK/ADJUSTMENT ··· 3-7
VALVE GUIDE REAMING ··· 12-8
VALVE SEAT RECONDITIONING ··· 12-9
WIRING DIAGRAMS ··· 14-2